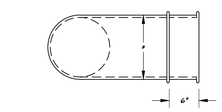

PLAN

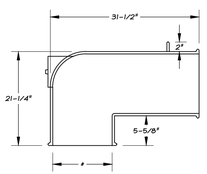

ELEVATION

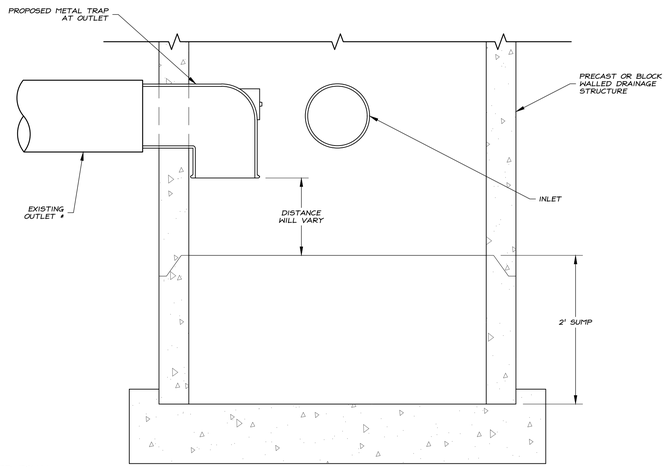

CATCH BASIN

NOTES:

1. TRAP TO BE NEENAH R-3705 OR APPROVED EQUAL.
2. TRAP TO BE GROUTED CAST OR GROUTED INTO WALL OF MANHOLE;PIPE BELL SHALL NOT BE SUPPORT STRUCTURE.

* SIZE TO MATCH EXISTING PIPE OUTLET SIZE

METAL TRAP DETAIL

NOT TO SCALE

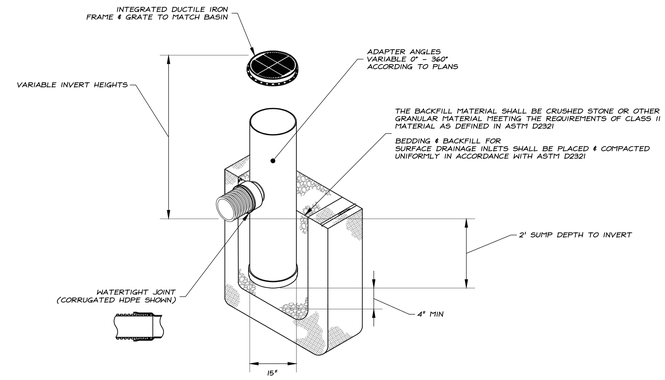

15" DRAIN BASIN

NOT TO SCALE

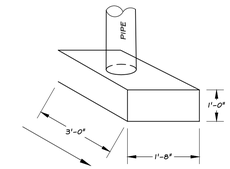

CONCRETE COLLAR

Nyloplast

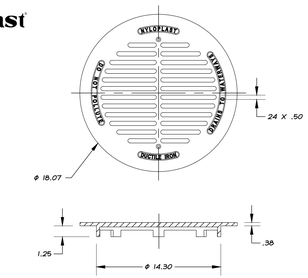

15" DROP-IN GRATE

NOT TO SCALE

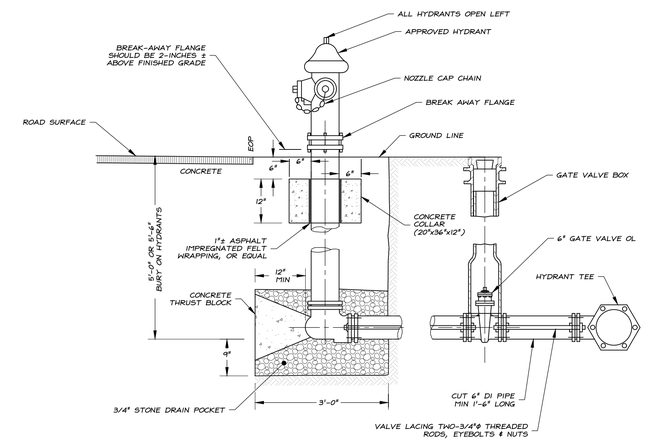

FIRE HYDRANT ASSEMBLY

TYPICAL RODDING INSTALLATION

NOT TO SCALE

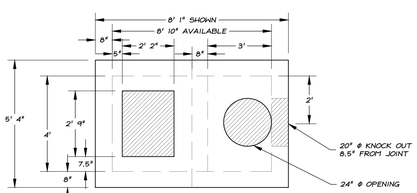

PLAN VIEW

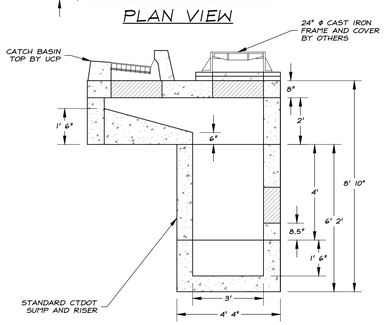

CROSS SECTION

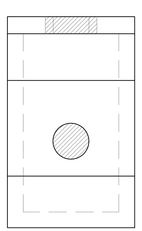

END VIEW

NOTE:

1. TAKEN FROM UNITED CONCRETE PRODUCTS, INC

TYPICAL OFFSET CATCH BASIN

NOT TO SCALE

NOTES:

1. REINFORCING STEEL WELDED WIRE FABRIC CONFORM TO LATEST ASTM SPECIFICATION A185
2. REINFORCING STEEL DEFORMED BARS CONFORM TO LATEST ASTM SPECIFICATION A615, GRADE 60
3. CONCRETE COMPRESSIVE STRENGTH - 4,000 PSI AT 28 DAYS SELF COMPACTING CONCRETE MIX
4. METHOD OF MANUFACTURE: WET CAST
5. DESIGN LOAD: AASHTO H-20

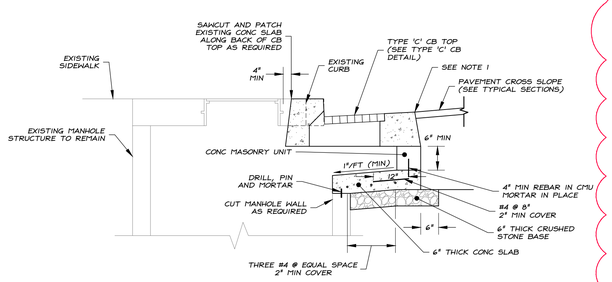

SECTION B-B

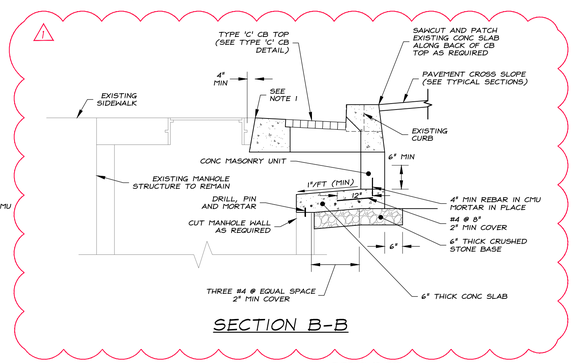

SECTION B-B

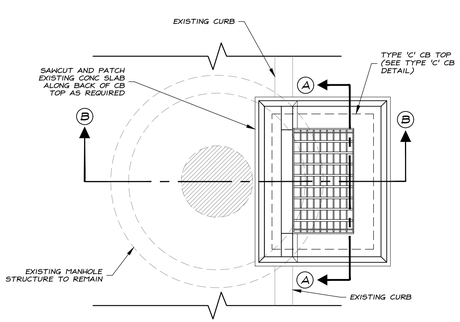

PLAN

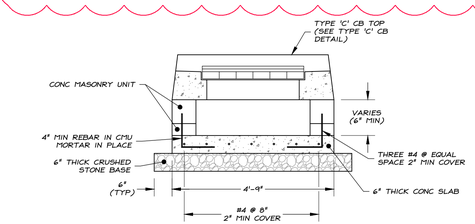

SECTION A-A

NOTES:

1. SAWCUT 2 FT MAX FROM EDGES OF PROPOSED CATCH BASIN FOR INSTALLATION. REPAIR PAVEMENT AS REQUIRED (REFER TO PAVEMENT REPAIR DETAIL). ALL OF THIS WORK SHALL BE PAID FOR UNDER THE APPROPRIATE CATCH BASIN ITEM (SEE TECHNICAL SPECIFICATIONS).
2. PLAN VIEW SIMILAR FOR SECTIONS B-B

SPECIAL TYPE "C" CATCH BASIN

NOT TO SCALE

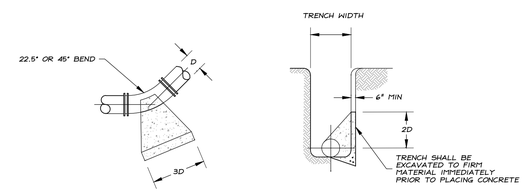

PLAN SECTION

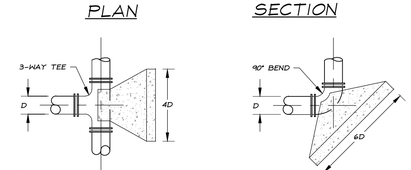

PLAN PLAN

ANCHORS BASED ON MAXIMUM ALLOWABLE WATER PRESSURE OF 125 PSI

SHOULD ONLY BE USED WHEN SOIL CONDITIONS ARE STABLE

NOTES:

THRUST BLOCKS ARE NOT AN ACCEPTABLE METHOD OF THRUST RESTRAINT IN MOST SITUATIONS, AND WILL ONLY BE PERMITTED IN SPECIAL CASES

CONCRETE THRUST BLOCKS

FOR USE WITH 12" & SMALLER WATER MAINS

NOT TO SCALE

ADDENDA		
ADDENDUM	NOTES	INITIALS
1	SPECIAL TYPE "C" CATCH BASIN DETAIL & NOTES MODIFICATION	AR

PROJECT DATA	
FIELD BOOK	BOOK No. 28, 64-78 & BOOK No 29, Pg. 17-19
DWG FILE	15-112 SD02 - D-02.2.dwg
LAYOUT TAB	D-02.2 - Drainage Details
SHEET No.	28 OF 39

© copyright 2016 Stadia Engineering Associates, Inc.

SCALE: As Noted

FIELD CREW	FIELD DATE	PROJECT No.	DWG BY	DWG DATE	DWG No.
A.R. & J.A.	JUNE - JULY 2015	2015-112	A.R. & J.A.	JULY 2015	D-208AB

STADIA ENGINEERING ASSOCIATES, INC.
ENGINEERS · ENVIRONMENTAL PLANNERS · SURVEYORS
Western Connecticut Office
Southbury, Connecticut 06488
(203) 267-0477
Eastern Connecticut Office
Bozrah, Connecticut 06334
New London, Connecticut 06320
(860) 887-9777
Web: www.stadiaeng.com
E-Mail: info@stadiaeng.com

REVISIONS

DATE		INITIALS
18 MAR 2016	P&Z SUBMISSION RELEASED FOR REVIEW AND COMMENTS BY CITY	JA
26 APRIL 2016	FINAL PLAN SET RELEASED FOR BIDDING	JA

SHEET TITLE

DRAINAGE AND WATER DETAILS & NOTES

DEPICTING THE REHABILITATION OF THE PARKING LOTS ALONG

EUGENE O'NEILL DRIVE

PREPARED FOR THE

CITY OF NEW LONDON

EUGENE O'NEILL DRIVE, GREEN STREET, TILLEY STREET, PEARL STREET, GOLDEN STREET, SHELL STREET, BANK STREET, AND SHARK STREET
NEW LONDON, CONNECTICUT

PROJECT No. 2015-112

PLOT DATE 16 MAY 2016

DWG No. SD02 - D-02.2