City of New London

Department of Finance-Purchasing Agent
13 Masonic Street • New London, CT 06320 • Phone (860) 447-5215 • Fax (860) 447-5297

Request for Proposals
Specifications and Proposal Documents Attached

Proposal No.: 2021-12

Opening Date and Time: June 8, 2021 @ 2:00 P.M.

Title: City of New London Multi-Use Trail

Special Instructions:

1. **There will be a MANDATORY site visit on May 25, 2021 at 10:00 A.M. Respondents will meet at 9:30 A.M. at 111 Union St., New London, CT 06320 to sign-in and then drive to location.**
2. **All questions should be directed to Brian Sear by email at bsear@newlondonct.org and Thomas Quintin at tquintin@newlondonct.org no later than June 2, 2021 by 4:00 P.M. Please copy Joshua Montague at jmontague@newlondonct.org on all inquiries.**

The following information must appear in the lower left hand corner of the

envelope: Sealed Proposal No.: 2021-12

Not to be opened until June 8, 2021 at 2:00PM

Return Bid to:

Joshua Montague; Accounting Purchasing Agent
City of New London
13 Masonic Street
New London, CT 06320

Proposals shall not be accepted after the Opening Date and Time indicated above.

City of New London

Department of Finance-Purchasing Agent
13 Masonic Street • New London, CT 06320 • Phone (860) 447-5215 • Fax (860) 447-5297

PLEASE RETURN THIS FORM IMMEDIATELY

Acknowledgement: Receipt of Request for Proposals

Bid No.: 2021-12

City of New London Multi-Use Trail

Please take a moment to acknowledge receipt of the attached documents. Your compliance with this request will help us to maintain proper follow-up procedures and will ensure that you receive any addendum that may be issued.

Date Issued: May 14, 2021

Date documents received: _____/_____/_____

Do you plan to submit a response? Yes_____ No_____

Print or type the following information:

Company Name: _____

Address: _____

_____

Telephone: _____ Fax: _____

E-mail: _____

Received by: _____

Note: Faxed or e-mailed acknowledgements are requested.
Fax No.: (860)447-5297
E-mail: jmontague@ci.new-london.ct.us

Fax this sheet only. A cover sheet is not required.

Affirmative Action – Equal Opportunity Employer

City of New London

Department of Finance-Purchasing Agent
13 Masonic Street • New London, CT 06320 • Phone (860) 447-5215 • Fax (860) 447-5297

Standard Invitation for Bids (IFB) and Contract Terms and Conditions

All Invitations for Bids issued by the City of New London (City) will bind Bidders to the terms and conditions listed below, unless specified otherwise in any individual Invitation for Bids.

Incorporated by reference into this contract are the provisions of Section 2-66 through 2-71 and Section 2-73 of the Code of Ordinances of the City of New London.

The contractor agrees to comply with the Code of Ordinances as they exist on the date of the contract and as they may be adopted or amended from time to time during the term of this contract and any amendments thereto.

Submission of Bids

1. Bids must be submitted on forms supplied by the City of New London. Telephone, facsimile or e-mail bids will not be accepted in response to an Invitation for Bids. An original and one (1) copy of the Proposal Form shall be returned to the Purchasing Agent.

2. The date and time bids are to be opened are given in each Invitation for Bids issued. Bids received after the specified date and time of the bid opening given in each Invitation for Bids will not be considered. Bid envelopes must clearly indicate the bid number as well as the date and time of the bid opening. The name and address of the bidder should appear in the upper left-hand corner of the envelope.

3. Incomplete proposal forms may result in the rejection of the bid Amendments to bids received by the Purchasing Agent after the date and time specified for the bid opening shall not be considered. Bids shall be computer prepared, typewritten or handwritten in ink. Bids submitted in pencil shall be rejected. A person duly authorized to sign bids for the bidder shall sign all bids. Unsigned bids shall be rejected. The person signing the Proposal Form or their authorized designee must initial errors, alterations or corrections on both the original and copy of the Proposal Form to be returned. In the event an authorized designee initials a correction, there must be written authorization from the person signing the Proposal Form to the person initialing the erasure, alterations or corrections. Failure to do so shall result in rejection of the bid for those items erased, altered or corrected and not initialed.

4. Conditional bids are subject to rejection in whole or in part. A conditional bid is defined as one that limits, modifies, expands or supplements any of the terms and conditions and/or specifications of the Invitation for Bids.

5. Alternate bids will not be considered. An alternate bid is defined as one that is submitted in addition to the bidder's primary response to the Invitation for Bids.

6. Prices should be extended in decimal, not fraction, to be net and shall include delivery and transportation charges fully prepaid by the Contractor to the destination specified in the Invitation for Bids and subject only to cash discount.

7. Pursuant to Sections 12-412 and 12-412(1) of the Connecticut General Statutes, the City of New London is exempt from the payment of excise, transportation and sales taxes imposed by the Federal Government and/or the State. Such taxes must not be included in the bid prices.

8. In the event of a discrepancy between the unit price and the extension, the unit price shall govern.

9. By its submission the Bidder represents that the bid is not made in connection with any other Bidder submitting a bid for the same commodity or commodities and is in all respects fair and without collusion or fraud.

10. All bids will be opened and read publicly and upon award are subject to public inspection.

Guaranty or Surety

11. Bid bonds, performance bonds, and labor and material bonds will be required as specified below. Guaranty or surety may be in the form of certified check. Bonds must meet the following requirements: Corporation – must be signed by an official of the corporation above their official title and the corporate seal must be affixed over the signature; Firm or Partnership - must be signed by all of the partners and indicate they are "doing business as"; Individual – must be signed by the owner and indicated as "Owner". The surety company executing the bond or countersigning must be licensed in Connecticut and an official of the surety company must sign the bond with the corporate seal affixed over the signature. Signatures of two (2) witnesses for both the principal and the surety must appear on the bond. Power of attorney for the official signing the bond for the surety company must be submitted with the bond.

    Bid Bond – Ten percent (10%) due at time of bid for all contract services and public works/construction projects that exceed twenty thousand dollars ($20,000.00)

    Performance Bond – One hundred percent (100%) of contract price for projects that exceed fifty thousand dollars ($50,000.00).

    Labor and Material Payment Bonds – One hundred percent (100%) of contract price for projects that exceed fifty thousand dollars ($50,000.00).

Award

12. Award of this contract will be made to the lowest responsible, qualified bidder and will be based on net cost and City specifications. The City of New London reserves the right to award this contract to other than the low bidder and to make multiple awards if deemed in the best interest of the City.

13. The City of New London allows a fifteen percent (15%) local vendor preference. A New London based business will be considered the lowest responsible bidder if its bid is within fifteen percent (15%) of the low bid and it is willing to accept the award at the low bid price. Any bidder claiming to be a New London based business must provide documentation that all of its motor vehicles are registered in New London and that payment of all of its property and motor vehicle taxes are current.

14. The City of New London may reject any bidder in default of any prior contract or guilty of misrepresentation or any bidder with a member of its firm in default or guilty of misrepresentation.

15. The Purchasing Agent may correct inaccurate awards resulting from clerical or administrative errors.

Other Requirements

16. The City has an employment preference goal that jobs be offered to local residents on public prevailing wage projects with thresholds great than $100,000 for renovation and $400,000 for new construction. For such projects, it is understood that contractors shall make a good faith effort to employ a participating workforce comprised of twenty-five (25%) local residents of New London County, CT, with residents of the City of New London, CT getting a priority representing fifty percent (50%) of said participation, which will include twenty-five percent (25%) female and minority.

17. The City has an employee training preference goal that apprenticeship opportunities be made available for state licensed trades on public prevailing wage projects with thresholds greater than $100,000 for renovation and $400,000 for new construction. For such projects, it is understood that contractors shall make a good faith effort to employ a minimum of ten percent (10%) of the workforce per state licensed trade as apprentices and, of this number, a minimum of fifty percent (50) shall be in the first year of apprenticeship training.

Standard Invitation for Bids (IFB) and Contract Terms and Conditions (con't)

Contract

18. The existence of a contract shall be determined in accordance with the requirements set forth above.

19. The Contractor shall not assign or otherwise dispose its contract or its right, title or interest, or its power to execute such contract to any other person, firm or corporation without the prior written consent of the City of New London.

20. Failure of a Contractor to deliver commodities or perform services as specified will constitute authority for the City of New London to purchase these commodities or services on the open market. The contractor agrees to promptly reimburse the City of New London for excess cost of these purchases. The purchases will be deducted from the contracted quantities.

21. The Contractor agrees to hold the City of New London harmless from liability of any kind for the use of any copyrighted or uncopyrighted composition, secret process, patented or unpatented invention furnished or used in the performance of the Contract; Guarantee its products against defective material or workmanship; repair damages of any kind, for which it is responsible to the premises or equipment, to its own work or to the work of other contractors; obtain and pay for all licenses, permits, fees etc., and to give all notices and comply with all requirements of the City of New London, the State of Connecticut and the U.S. Government.

22. Insurance requirements generally apply to contract services, professional services and public works improvement/construction projects. The Contractor will carry commercial general liability insurance to protect the City of New London from loss. The following minimum limits shall be met:

    Bodily Injury and Property Damage – One million dollars ($1,000,000.00) each occurrence; two million dollars ($2,000,000.00) aggregate

    Products or Completed Operations - One million dollars ($1,000,000.00) each occurrence; two million dollars ($2,000,000.00) aggregate

    Professional Liability (Errors and Omissions) Coverage appropriate to the contractor's operations – Two million dollars ($2,000,000.00) each occurrence

    Commercial Automobile Coverage including owned, non-owned, leased and hired vehicles (if used on City of New London property) – One million dollars ($1,000,000.00) combined single limit for each accident.

    Workers' Compensation Coverage - Will be in accordance with State of Connecticut requirements at the time of bid.

    Any deductible or self-insured retention must be disclosed and any claim payments falling within the deductible shall be the responsibility of the contractor.

    The Contractor shall require all subcontractors to carry the same forms and minimum coverages that it is required to provide. Evidence of these coverages must be provided to the City of New London Purchasing Agent prior to the contractor or subcontractor coming onto the work site.

    All insurance policies shall be endorsed to the City of New London, its officers and employees as additional insured, and shall not be reduced or cancelled without thirty (30) days prior written notice to the Purchasing Agent. In addition, the contractor's insurance shall be primary as respects the City of New London, and any other insurance maintained by the City of New London shall be excess and not contributing insurance with the contractor's insurance.

23. Notwithstanding any provision or language in this contract to the contrary, the Mayor may, without cause, terminate this contract upon approval by the City Council, whenever he/she determines that such termination is in

the best interest of the City of New London. Any such termination shall be effected by delivery to the Contractor of a written notice of termination. The notice of termination shall be sent by registered mail to the Contractor address furnished to the City of New London for purposes of correspondence or by hand delivery. Upon receipt of such notice, the Contractor shall both Immediately discontinue all services affected (unless the notice directs otherwise) and deliver to the City of New London all data, drawings, specifications, reports, estimates, summaries, and such other information and materials as may have been accumulated by the Contractor in performing its duties under this contract, whether completed or in progress. All such documents, information and materials shall become the property of the City of New London. In the event of such termination, the contractor shall be entitled to reasonable compensation as determined by the Mayor, however, no compensation for lost profits shall be allowed.

Delivery

24. All products and equipment delivered must be new unless otherwise stated in the proposal specifications.

25. All deliveries will be to the locations specified by the City of New London. The City of New London does not have a loading dock therefore all Contractors will be responsible for inside delivery without assistance from City of New London personnel.

26. Payment terms are net 45 days after receipt of goods or invoice, whichever is later, unless otherwise specified.

27. Charges against a Contractor shall be deducted from current obligations. Money paid to the City of New London shall be payable to the Treasurer, City of New London.

Saving Clause

28. The Contractor shall not be liable for losses or delays in the fulfillment of the terms of the contract due to wars, acts of public enemies, strikes, fires, floods, acts of God or any other acts not within the control of or reasonably prevented by the Contractor. The contractor will give written notice of the cause and probable duration of any such delay.

Advertising

29. Contractors may not reference sales to the City of New London for advertising and promotional purposes without prior approval of the City of New London.

Rights

30. The City of New London has sole and exclusive right and title to all printed material produced for the City of New London and the Contractor shall not copyright the printed matter produced under this contract.

31. The Contractor assigns to the City of New London all rights, title and interests in and to all causes of action it may have under Section 4 of the Clayton Act, 15 USC 15, or under Chapter 624 of the Connecticut General Statutes. This assignment occurs when the contractor is awarded the contract.

32. The Contractor agrees that it is in compliance with all applicable federal, state and local regulations, including but not limited to Connecticut General Statutes Section 7-148i. The Contractor also agrees that it will hold the City of New London harmless and indemnify the City of New London from any action which may arise out of any act by the Contractor concerning lack of compliance with these laws and regulations. All purchases will be in compliance with Sections 22a-194 to 22a-194g of the Connecticut General Statutes related to product packaging.

33. This contract is subject to the provisions of Executive Order Number Three of Governor Thomas J. Meskill promulgated June 16, 1971, the provision of Executive Order Number Seventeen of Governor Thomas J. Meskill promulgated February 15, 1973 and Section 16 of Public Act 91-58, nondiscrimination regarding sexual orientation, and the provisions of Executive Order No. Sixteen of Governor John G. Rowland promulgated August 4, 1999 regarding Violence in the Workplace Prevention Policy.

CONTRACT DOCUMENTS

FOR

CITY OF NEW LONDON
MULTI-USE TRAIL

BANK & SPARYARD STREET
NEW LONDON, CONNECTICUT

February 23, 2021

Prepared For:

City of New London
New London City Hall
181 State Street
New London, Connecticut 06320

ANCHOR Barton & Loguidice

41 Sequin Drive
Glastonbury, CT 06033
T: 860.633.8770
F: 860.633.5971

TABLE OF CONTENTS

SECTION **TAB**

INSTRUCTIONS TO BIDDERS ..... **A**

FORMS ..... **B**
- Bid Proposal Form
- Noncollusion Affidavit
- Bid Bond
- Agreement
- Construction Performance Bond
- Construction Payment Bond
- Affirmative Action/Equal Employment Opportunity
- Anti-Fracking Provision

GENERAL CONDITIONS ..... **C**

SUPPLEMENTARY CONDITIONS ..... **D**

SPECIAL PROVISIONS ..... **E**

TECHNICAL SPECIFICATIONS ..... **F**

PREVAILING WAGE RATE INFORMATION ..... **G**

COMMISSION ON HUMAN RIGHTS AND OPERTUNITIES

(CHRO) CONTRACT COMPLIANCE ..... **H**

PLANS ..... **I**
- Title Sheet
- Sheet 1 of 6: Layout and Grading Plan and Profile (Alternate Bid)
- Sheet 2 of 6: Layout and Grading Plan and Profile (Base Bid)
- Sheet 3 of 6: Detailed Plan Enlargements
- Sheet 4 of 6: Site Development Details
- Sheet 5 of 6: Site Development Details
- Sheet 6 of 6: Site Development Details

APPENDIX ..... **J**
- APPX No.1: US Army Corps of Engineers (USACE) Approval Letter

TAB A

Instructions to Bidders

INSTRUCTION TO BIDDERS

1. PROJECT DESCRIPTION:

The City of New London, Connecticut is soliciting sealed bids for completing the installation of a multi-use trail along the Thames River.

The base bid for this project shall encompasses constructing 550 linear feet of a multi-use trail along the top of an existing US Army Corps of Engineers (USACE) hurricane barrier located along the Thames River in New London, CT. (See appendix No. 1 - ACOE Acceptance Letter, dated November 15, 2019). The multi-use trail will consist of a concrete slab and a pedestrian guide rail system. Contractor will be responsible for removing existing barrier materials and installing the concrete slab at specific elevations to maintain the integrity of the hurricane barrier. Base bid will also include the relocation of existing barrier materials to reconstruct side slopes of barrier, installation of two (2) removable steel bollards, relocation/replacement of existing metal beam guide rail, installation of chain link fencing, paving of existing access drive and installation of two (2) sidewalk ramps in existing sidewalks located at end of trail as shown on plans.

Contractor shall provide two separate line items for the installation of seven (7) Aris Wind's Off-Grid Remote Power Unit (RPU):

a) **Concrete foundations** for the proposed Aris Wind's Off-Grid Remote Power Unit (RPU) shall be included as part of an add alternate unit price.
b) **Aris Wind's Off-Grid Remote Power Unit (RPU)** with a rate output of 300W, 64.6-inch by 36.3-inch solar panel unit and one (1) LED Light lamp shall be included as part of an add alternate unit price.

An Alternate Bid shall also be included for the construction of 450 linear feet of a multi-use concrete trail along a separate section of the existing hurricane barrier (Sta. 100+00 to Sta. 104+50). Contractor will be responsible for removing material to install the multi-use trail, installing concrete multi-use trail, placing material to backfill side slopes, relocating existing benches, and installing concrete apron for existing stairs as shown on plans.

The work described above includes furnishing, installing, and incorporating all materials and equipment into the project as well as performing or providing all labor, supervision, equipment and services unless otherwise noted within the bid documents.

2. GENERAL:

Sealed Bids will be mailed to Joshua Montague; Accounting Purchasing Agent of the City of New London located at 13 Masonic Street, New London, CT 06320. Bids will be accepted until **2:00 PM prevailing time on Tuesday June 8, 2021** at which time the bids will be opened publicly and read aloud. Bids received after the Bid Opening date and/or time will be returned unopened.

Bid Documents are available from Advanced Reprographics, 50 Corporate Avenue, Plainville CT 06062, (860) 410-1020. The Bid Documents may be viewed and/or obtained by going to the Advanced Reprographics website WWW.ADVANCEDREPRO.NET, prospective bidders should access the "PLANROOM" on the website and go to the

"PUBLIC JOBS" area, no 'Log-In' information is necessary. Bidders are responsible for printing and shipping costs or pick up at the Advanced Reprographics office. Bid Documents may also be ordered by calling the phone number listed above. Bidders are responsible for obtaining all addendums posted on the Advanced Reprographics website.

3. CONTRACT DOCUMENTS:

These Contract Documents include a complete set of Bidding Forms which are not to be detached from the Contract Documents, filled out or executed. Division II Construction Details and Division III Materials Section in the State of Connecticut Department of Transportation (CTDOT) Standard Specifications for Roads, Bridges and Incidental Construction, Form 818, dated 2020 through Supplemental Specifications dated July 2020, These Standard Specifications –Form 818, in a searchable document format, may be accessed on the Department's internet site: Click on "Doing Business with CTDOT" under "Publications" choose "Specifications for Roads, Bridges, Facilities & Incidental Construction" from the list, then click on "Form 818"at: https://portal.ct.gov/DOT

4. BIDS:

Bid Documents shall be enclosed in a sealed envelope addressed to the Department of Finance-Purchasing Agent, 13 Masonic Street, New London, CT 06320 and clearly marked **"SEALED PROPOSAL NO.: 2021-12. NOT TO BE OPENED UNTIL JUNE 8, 2021 AT 2:00 PM"** along with the name of Bidder, date and time of Bid Opening in order to guard against premature opening of the Bid.

All Bids must be submitted on forms supplied by the Owner and shall be subject to all requirements of the Contract Documents, including "Instructions to Bidders." All Bids must be regular in every respect; no interlineations, ditto marks, excisions or special conditions shall be made or included in the Bid Form by the Bidders.

The Owner may consider as irregular any Bid on which there are any omissions, alterations of form, additions not called for, conditional or alternate Bids, or irregularities of any kind and, at its option, may reject same. The blank spaces in the proposal must be filled in correctly where indicated for each and every item for which a quantity is given typed or printed in ink. If any price is omitted, the Bid may be rejected. The Bidder shall sign his proposal correctly. If the proposal is made by an individual, his name and post office address must be shown. If made by a firm, partnership, or by a corporation, the proposal must be signed by an official of the firm, partnership, or corporation authorized to sign contracts, and also must show the post office address of the firm, partnership or corporation.

A Non-Collusion Affidavit shall be completed and returned with the submitted Bid. More than one proposal from an individual, a firm or partnership, a corporation or association under the same or different names will not be considered. Reasonable ground for believing that any Bidder is interested in more than one proposal for the work contemplated will cause the rejection of all proposals in which such Bidder is interested. Proposals in which the prices are obviously unbalanced may be rejected.

5. ADDENDA & INTERPRETATIONS:

Any request from a prospective Bidder for interpretation of meaning of Contract Drawings, Specifications or other Contract Documents shall be made in writing to the office of Barton & Loguidice, LLC. 41 Sequin Dr. Glastonbury, CT 06033 and to be given consideration must be received at least four (4) days prior to date fixed for opening of proposals. Interpretations will be made in the form of written Addenda to Contract Documents, which Addenda shall become a part of the Contract. Such requests may be sent to Barton & Loguidice, LLC. via e-mail of kgrindle@bartonandloguidice.com. Not later than two (2) days prior to date fixed for opening of proposals, Addenda will be mailed or delivered to all parties recorded as having obtained Contract Documents. It is the responsibility of the bidder to verify that all Addenda have been received and incorporated into the submitted bid. Failure of any Bidder to receive any such Addenda shall not relieve Bidder from any obligations under his proposal as submitted. Only questions answered by formal written Addenda will be binding. Oral and other interpretations or clarifications will be without legal effect.

6. SITE CONDITIONS:

All information on the Drawings or in the contract Documents relating to subsurface conditions, utilities, and other structures is from best sources available at present to the Owner. All such information and drawings of existing construction are furnished only for the information and convenience of Bidders.

At the date fixed for opening of Bids, it will be presumed that each Bidder has made an examination of location and site of work to be done under Contract; has satisfied himself as to actual conditions, requirements and quantities of work; has considered federal, state and local laws and regulations that may affect cost, progress, performance or furnishing the Work; and has read and become thoroughly familiar with US Army Corps of Engineers (USACE) recommendations, AMTRAK requirements and coordination with the City of New London. In addition, become thoroughly familiar with Contract Documents including Contract Drawings, Specifications, Addenda, and documents referenced therein.

The Owner and the Engineer assume no responsibility whatsoever with respect to ascertaining for the Contractor any facts concerning physical characteristics at the site of the project.

7. BIDDER'S QUALIFICATIONS:

The Owner shall make such investigation as deemed necessary to determine the ability of the Bidder to discharge the Contract. After Bid opening, Bidder shall be prepared to furnish the Owner with all written evidence as may be required for this purpose (e.g., financial data, previous experience, and present commitments) within five (5) days after Owner requests such evidence. Each Bid must contain evidence of Bidder's qualification to do business in the State of Connecticut or covenant to obtain such qualification prior to award of the contract.

Bids received from Bidders who have previously failed to complete contracts within the time required, or who have previously performed similar work in an unsatisfactory manner, may be rejected. A Bid may be rejected if the Bidder cannot show that he has the necessary capital and experience, and owns, controls, or can procure the necessary plan to commence and complete the work at the rate or time specified, and that he is not already obligated for the performance of other work which would delay the commencement, prosecution, or completion of the work.

8. MODIFICATION:

Any Bidder may modify his Bid at any time prior to the scheduled closing time for receipt of Bids, by submitting an appropriate document duly executed in a manner that Bid must be executed and delivered to the place where Bids are to be submitted. After opening of Bids, no Bidder may withdraw his proposal for a period of sixty (60) days. Owner may, in its sole discretion, release any Bid prior to that date.

9. REJECTION OF BIDS:

The Owner also reserves the right to reject any or all Bids, for any reason it deems advisable, and to award Contract or Contracts to any of the Bidders, regardless of amount of Bid. If the Contract is awarded, it will be awarded to the lowest responsible and eligible Bidder (or Bidders) possessing skill, ability and integrity necessary for faithful performance of work.

10. TIME OF COMPLETION & LIQUIDATED DAMAGES:

The Bidder must agree to fully complete all work within the number of consecutive calendar days of the issuance of the Notice to Proceed set forth in the Agreement. The Bidder must agree also to pay as liquidated damages the sum set forth in the Agreement for each consecutive calendar day thereafter.

11. AWARD OF CONTRACTS:

If the Contract is awarded, Owner will give successful Bidder a Notice of Award within forty five (45) days after the day of Bid opening. The successful Bidder shall then execute and deliver to the Owner, within ten (10) days after notification of the award, three (3) executed Agreements, Final Certificate of Insurance, Performance Bond, Payment Bond, Contractors Minority Business Enterprise Utilization Form and Schedule of Values on forms provided by the Owner. If the successful Bidder fails to comply with the requirements of these documents within ten (10) days of receiving said Notice, that Bidder shall forfeit Bid Security and, at the option of the Owner, the Award may become null and void. The Owner may then proceed to Award the Contract to another of the Bidders.

12. BID SECURITY:

Each Bid must be accompanied by a surety bond, certified or bank check, or a letter of credit, in the amount of 5% of the total of the Bid with the forms supplied by the Owner. Bid security of the successful Bidder will be retained until such Bidder has executed the Agreement, furnished the required contract security and met the other conditions of the Notice of Award, whereupon the Bid security will be returned. The Bid security of other Bidders whom Owner believes to have a reasonable chance of receiving the award may be retained by Owner until the earlier of the seventh day after the Effective Date of the Agreement or the sixty-first day after Bid opening, whereupon the Bid security furnished by such Bidders will be returned. Bid security with Bids which are not competitive will be returned within seven (7) days of Bid opening.

13. SCHEDULE OF VALUES:

The apparent successful Bidder must submit, prior to the execution of an Agreement, a preliminary schedule of values for all of the Work. The preliminary schedule of values must be submitted after Bidding by the apparent low Bidder, and the schedule of values must be deemed acceptable by the Engineer, before the Agreement is executed.

14. SECURITY FOR FAITHFUL PERFORMANCE:

In addition to the Agreement, the successful Bidder shall also provide, within the time stipulated, a Construction Performance Bond by a company satisfactory to the Owner in an amount equal to One Hundred Percent (100%) of Estimated Total Contract Price recorded in the Proposal section of the Contract as executed, and a Construction Payment Bond in like amount will be required from the successful Bidder for faithful performance of the Contract.

TAB B

Forms

Bid Proposal Form
Non-Collusion Affidavit of Bidder
Bid Bond
Agreement
Construction Performance Bond
Construction Payment Bond
Affirmative Action/Equal Employment Opportunity
Anti-Fracking Provision

BID PROPOSAL FORM

BID PROPOSAL

PROJECT IDENTIFICATION:

City of New London Multi-Use Trail

THIS BID IS SUBMITTED TO:

Department of Finance-Purchasing Agent
13 Masonic Street
New London, Connecticut 06032
Attention: Julie Chapman, Purchasing Agent

The Undersigned Bidder proposes and agrees, if this Bid is accepted, to enter into an agreement with Owner in the form included in the Contract Documents to perform and furnish all Work as specified or indicated in the Contract Documents for the Bid Price and within the Bid Times indicated in this Bid and in accordance with the other terms and conditions of the Contract Documents.

Bidder accepts all terms and conditions of the Invitation to Bid and Instructions to Bidders, including without limitation those dealing with the disposition of Bid security. This Bid will remain subject to acceptance for sixty (60) days after the day of Bid opening. Bidder will sign and deliver the required number of counterparts of the Agreement with the Bonds and other documents required by the Bidding Requirements within ten (10) days after the date of Owner's Notice of Award.

In submitting this Bid, Bidder represents, as more fully set forth in the Agreement, that:

1. Bidder has examined and carefully studied the Bidding Documents and the following Addenda receipt all of which is hereby acknowledged (List Addenda by Addendum Number and Date):

   _____

   _____

   _____

2. Bidder has visited the site and become familiar with and is satisfied as to the general, local and site conditions that may affect cost, progress, performance and furnishing of the Work.

3. Bidder is familiar with and is satisfied as to all federal, state and local Laws and regulations that may affect cost, progress, performance and furnishing of the Work.

4. Bidder has carefully studied all reports and explorations and tests of subsurface conditions at or contiguous to the site and all drawings of physical conditions in or relating to existing surface or subsurface structures at or contiguous to the site (except Underground Facilities) which have been identified in the Supplementary Conditions. Bidder acknowledges that Owner and Engineer do not assume responsibility for the accuracy or completeness of information and data shown or indicated in the Bidding Documents with respect to Underground Utilities at or contiguous to the site. Bidder has obtained and carefully studied (or assumes responsibility for having done so) all such additional or supplementary examinations, investigations, explorations, tests, studies and data concerning conditions (surface, subsurface, Underground Facilities) at or

contiguous to the site or otherwise which may affect cost, progress, performance or furnishing of the Work or which relate to any aspect of the means, methods, techniques, sequences and procedures of construction to be employed by Bidder and safety precautions and programs related thereto. Bidder does not consider that any additional examinations, investigations, explorations, tests, studies or data are necessary for the determination of the Bid for performance and furnishing of the Work in accordance with the times, price and other terms and conditions of the Contract Documents.

5. Bidder is aware of the general nature of Work to be performed by Owner and others at the site that relates to Work for which this Bid is submitted as indicated in the Contract Documents.

6. Bidder has correlated the information known to Bidder, information and observations obtained from visits to the site, reports and drawings identified in the Contract Documents and all additional examinations, investigations, explorations, tests, studies and data with the Contract Documents.

7. Bidder has given Engineer written notice of all conflicts, errors, ambiguities or discrepancies that Bidder has discovered in the Contract Documents and the written resolution thereof by Engineer is acceptable to Bidder, and the Contract Documents are generally sufficient to indicate and convey understanding of all terms and conditions for performing and furnishing the Work for which this Bid is submitted.

8. This Bid is genuine and not made in the interest of or on behalf of any undisclosed person, firm or corporation and is not submitted in conformity with any agreement or rules of any group, association, organization or corporation; Bidder has not directly or indirectly induced or solicited any other Bidder to submit a false or sham Bid; Bidder has not solicited or induced any person, firm or corporation to refrain from bidding; and Bidder has not sought by collusion to obtain for itself any advantage over any other Bidder or over Owner.

9. Bidder will complete the Work in accordance with the Contract Documents for the following price(s):

BASE BID No.1: NEW LONDON MULTI-USE TRAIL PROJECT (STA. 104+50 TO STA. 110+00)

Bidder will complete the Work in accordance with the Contract Documents for the following LUMP SUMP price:

_____

Dollars (in words)

$_____

(in numbers)

The undersigned affirms that the above lump sum price represent the entire cost per plan (excluding Base Bid No.2 & 3), specifications, addenda, including all labor, materials, tools, equipment, overhead, profit and not no claim will be made on account of any increase in wage scales, materials prices, delivery delays, taxes, insurance, cost indexes or any other rates affecting the construction industry or this project.

BASE BID No.2: Complete Assembly for **"ARIS WIND'S OFF-GRID REMOTE POWER UNIT (RPU)" – LUMP SUM price:**

Bidder will complete the installation of concrete foundation and the complete assembly of seven (7) units of 29'-7" - **"ARIS WIND'S OFF-GRID REMOTE POWER UNIT (RPU)"**, as specified on the plans, complete in place, which price shall include all materials, equipment, tools and labor incidental thereto. This work is associated with the New London Multi-Use Trail Project, in accordance with the Contract Documents for the following LUMP SUM price:

ALTERNATE No.1: Installation of **"SEVEN (7) CONCRETE FOUNDATION"** as specified on the plans for the installation of proposed Aris Wind's Off-Grid Remote Power Unit (RPU), associate with the New London Multi-Use Trail Project, in accordance with the Contract Documents for the following LUMP SUM price:

(Add/Deduct)

_____

Dollars (in words)

$_____

(in numbers)

ALTERNATE No.2: Installation of "**SEVEN (7) ARIS WIND'S OFF-GRID REMOTE POWER UNIT (RPU**) equipped with 300W of rated power output, solar panel size of 64.6 inch by 36.3 inch and one (1) LED Lighting lamp, as specified on the plans, associate with the New London Multi-Use Trail Project, in accordance with the Contract Documents for the following LUMP SUM price:

(Add/Deduct)

_____

Dollars (in words)

$_____

(in numbers)

BASE BID No.3: Installation of **"ADDITIONAL 450 LINEAR FEET (STA. 100+00 TO STA. 104+50) OF MULTI-USE TRAIL"**

Bidder will complete the additional Work of installing approximately additional 450 linear feet of multi-use trail (Sta. 100+00 to Sta. 104+50), completed in place, in accordance with the Contract Documents for the following LUMP SUMP price:

(Add/Deduct)

_____

Dollars (in words)

$_____

(in numbers)

BASE BID SUMMARY:

A. TOTAL FOR BASE BID No. 1

$_____(in numbers)

B. TOTAL FOR BASE BID No.2

Alternate 1:

$_____ (in numbers)

Alternate 2:
$_____ (in numbers)

C. TOTAL FOR BASE BID No.3

$_____ (in numbers)

TOTAL PROJECT BASE BID (A + B + C)

_____
Dollars (in words)

$_____
(in numbers)

UNIT PRICE ADJUSTMENT SCHEDULE

ITEM NO.	SPECIFICATION SECTION	UNIT OF MEASURE	UNIT PRICE($)
1.	**BITUMINOUS PAVEMENT**	TONS	_____

UNIT PRICE IN WORDS:
_____

2.	**ADDITIONAL PEDESTRIAN GUIDE RAIL**	LF	_____

UNIT PRICE IN WORDS:
_____

All Unit Price Adjustments are for in-place materials and final payment of these items will be based upon actual measured quantities.

10. Bidder agrees that the Work will be substantially completed and completed and ready for final payment in accordance with Article 15 of the General Conditions on or before the dates or within the number of calendar days indicated in the Agreement.

11. Bidder accepts the provisions of the Agreement as to liquidated damages in the event of failure to complete the Work within the times specified in the Agreement.

12. The following documents are attached to and made a part of this Bid:

    Required Bid Security in the form of _____

13. Communications concerning this Bid shall be addressed to the address of Bidder below.

14. Terms used in this Bid which are defined in the General Conditions or Instructions to Bidders will have the same meanings indicated in the General Conditions or Instructions to Bidders.

SUBMITTED on: _____, 2021.

By: _____ Title: _____

Bidder: _____

Address: _____

_____

_____

SEAL – if Bid is by a Corporation

NON-COLLUSION AFFIDAVIT OF BIDDER

NON COLLUSION AFFIDAVIT OF PRIME BIDDER

State of _____)
) ss.
County of _____)

_____, being first duly sworn, deposes and say that:

(1) He is _____ of _____ herein referred to as the "Bidder" that has submitted the attached bid;

(2) He is fully informed respecting the preparation and content of the attached Bid and of all pertinent circumstances respecting such Bid;

(3) Such Bid is genuine and is not a collusive or sham Bid;

(4) Neither the said Bidder nor any of its officers, partners, owners, agents, representatives, employees or parties in interest, including this affiant, has in any way colluded, conspired, connived or agreed, directly or indirectly with any other Bidder, firm or person to submit a collusive or sham Bid in connection with the Contract for which the attached Bid has been submitted or to refrain from bidding in connection with such Contract, or has in any manner directly or indirectly, sought by agreement or collusion or communication or conference with any other Bidder, firm or person to fix the price or prices in the attached Bid or of any other Bidder, or to fix any overhead, profit or cost element of the Bid price or the Bid price of any other Bidder, or to secure through any collusion, conspiracy, connivance or unlawful agreement any advantage against the City of New London, CT or any person interested in the proposed Contract; and

(5) The price or prices quoted in the attached Bid are fair and proper and are not tainted by any collusion, conspiracy, connivance or unlawful agreement on the part of the Bidder or any of its agents, representatives, owners, employees, or parties of interest, including this affiant.

(6) That no officer or employee or person whose salary is payable in whole or in part from the City of New London is directly or indirectly interested in this Bid, or in the supplies, materials, equipment, work or labor to which it relates, or in any of the profits thereof.

Signed _____

Title _____

Subscribed and sworn before me this

_____ day of _____ 20____

_____
(Notary Public)

My Commission expires _____

NON COLLUSION AFFIDAVIT OF SUBCONTRACTOR

State of _____)
) ss.
County of _____)

_____, being first duly sworn, deposes and says that:

(1) He is _____ of _____ herein referred to as the "Subcontractor";

(2) He is fully informed respecting the preparation and content of the Subcontractor's Proposal submitted by the Subcontractor to _____, the Contractor for certain work in connection with the _____ Contract pertaining to the Project in New London, Connecticut;

(3) Such Subcontractor's Proposal is genuine and is not a collusive or sham Bid;

(4) Neither the said Subcontractors nor any of its officers, partners, owners, agents, representatives, employees or parties in interest, including this affiant, has in any way colluded, conspired, connived or agreed, directly or indirectly with any other Bidder, firm or person to submit a collusive or sham Bid in connection with the Contract for which the attached Bid has been submitted or to refrain from bidding in connection with such Contract, or has in any manner directly or indirectly, sought by agreement or collusion or communication or conference with any other Bidder, firm or person to fix the price or prices in said Subcontractor's Proposal or to fix any overhead, profit or cost element of the Bid price or the Bid price of any other Bidder, or to secure through any collusion, conspiracy, connivance or unlawful agreement any advantage against the City of New London, CT or any person interested in the proposed Contract; and

(5) The price or prices quoted in the attached Subcontractor's Proposal are fair and proper and are not tainted by any collusion, conspiracy, connivance or unlawful agreement on the part of the Bidder or any of its agents, representatives, owners, employees, or parties of interest, including this affiant.

(6) That no officer or employee or person whose salary is payable in whole or in part from the City of New London is directly or indirectly interested in this Bid, or in the supplies, materials, equipment, work or labor to which it relates, or in any of the profits thereof.

Signed _____

Title _____

Subscribed and sworn before me this

_____ day of _____ 20____

_____
(Notary Public)

My Commission expires _____

BID BOND

BID BOND

KNOW ALL MEN BY THESE PRESENTS, that we _____

_____

as Principal, and _____
a corporation duly organized under the laws of the State of _____as Surety are held and firmly bound unto the **City of New London, 181 State Street, New London, CT 06320,** hereinafter called the "Owner" in the sum of _____Dollars ($_____), for the payment of which sum well and truly to be made, the said Principal and Surety, bind ourselves, our heirs, executors, administrators, successors, and assigns, jointly and severally, firmly by these presents.

WHEREAS, the Principal has submitted a bid dated _____ to

NOW THEREFORE, if the Owner shall accept the bid of the Principal and the Principal shall enter into a Contract with the Owner in accordance with the terms of such bid and give such bond or bonds as may be specified in the bidding or Contract Documents with good and sufficient surety for the faithful performance of such Contract and for the prompt payment of labor and material furnished in the prosecution thereof, or in the event of the failure of the Principal to enter such Contract and give such bond or bonds, if the Principal shall pay to the Owner the difference not to exceed the penalty hereof between the amount specified in said bid and such larger amount for which the Owner may in good faith contract with another party to perform the Work covered by said bid, then this obligation shall be null and void, otherwise to remain in full force and effect.

Signed and sealed this _____ day of _____ 2018.

_____
(Principal) (Seal)

_____ _____
(Witness) (Title)

_____
(Surety) (Seal)

_____ _____
(Witness) (Title)

Attorney-in-Fact, State of _____, Power-of-Attorney for person signing for Surety Company must be attached to Bond.

CERTIFICATE AS TO CORPORATE PRINCIPAL

I, _____ certify that I am the _____ _____, of the Corporation named as Principal in the within bond; that _____ _____ who signed the said bond on behalf of the Principal was then the _____ _____ of said corporation; that I know his signature, and his signature thereto is genuine; and that said bond was duly signed, sealed, and attested to for and in behalf of said corporation by authority of this governing body.

Affix
_____ Corporate
Seal

Title _____

AGREEMENT

CONTRACT FOR SERVICES

THIS AGREEMENT made and entered into this ***XX*** day of ***Month, 2021***, by and between ***(Legal Name, address, city & state)***, hereinafter called **"Contractor"** and the City of New London, 181 State Street, New London, CT 06320, hereinafter called **"City."**

WHEREAS, the City desires to enter into a contract for the ***(state work being performed)*** and the Contractor represents itself as competent and qualified to accomplish the specific requirements of this contract to the satisfaction of the City, therefore this contract is entered into under the following terms and conditions:

1. The Contractor agrees to perform the services described below or in attachments if applicable. Only those attachments specifically referenced in this Contract for Services shall apply. The terms and conditions as contained in this Contract for Services shall take precedence over any conflicting terms as may be attached hereto.

2. **Term of the Contract:** The start date for this Contract shall be ***Month/Day, 2021*** and the completion date of this Contract shall be ***Month/Day, 2021***, time being of the essence***.***

3. **Contract Price:** The City shall pay the Contractor for the performance of the Contract in current funds, for the total quantities of work performed for the price of ***(written amount) ($dollar amount)***.

Based upon Applications for Payment submitted by the Contractor, the City shall make progress payments on account of the Contract Sum to the Contractor. The period covered by each Application for Payment shall be one calendar month ending on the last day of the month. The City shall make payment to the Contractor within 30 days after the City receives the Application for Payment. With each Application for Payment, the Contractor shall submit the most recent schedule of values, which allocates the Contract Price among the various portions of the Work. The Applications for Payments shall indicate the percentage of completion of each portion of the Work. Such Applications may include requests for payment on account of changes in the Work, but not yet included in Change Orders. Partial payment shall be due Contractor in the amount of 95.0% of the work in place.

Final payment, constituting the entire unpaid balance of the Contract Price, including Change Orders, shall be made by the City to the Contractor no later than 30 days after the Contractor has fully performed the Contract and has provided to the Owner a final Application for Payment.

4. **Contract Documents:** The Contract Documents consist of this Agreement, the Standard Bid and Contract Terms and Conditions, the Instructions to Bidders, the Contractor's bid as accepted by the City, the General and Special Conditions of the Work, the Technical Specifications, the drawings and all Addenda attached hereto.

The Contract Documents are complementary and what is called for by any one shall be as binding as if called for by all. In the event of any conflict or inconsistency between the provisions of this Agreement and the provisions of any of the other Contract Documents, the provisions of the Agreement shall prevail.

Reference to standard specifications, manuals or codes of any technical society, organization or association, or to the laws or regulations of any governmental authority, whether such reference be specific or by implication, shall mean the edition of the standard specification, manual, code or laws or regulations identified in the reference. In the event a particular edition is not identified, the reference shall mean the latest edition in effect at the time of receipt of the bid. However, no provision of any referenced standard specification, manual or code (whether or not specifically incorporated by reference in the Contract Documents) shall change the duties and responsibilities of the City, the Contractor or any of their consultants, agents or employees from those set forth in the Contract Documents.

5. **Obligations And Liability Of The Contractor:** The Contractor shall do all the work and perform and furnish all the labor, services, materials, equipment, plant, machinery, apparatus, appliances, tools, supplies and all other things (except as otherwise expressly provided herein) necessary and as herein specified for the proper performance and completion of the Work in the manner and within the time hereinafter specified, in strict accordance with the Drawings, Specifications and other Contract Documents, in conformity with the directions and to the satisfaction of the City, and at the prices herein agreed upon therefor.

All parts of the Work and all fixtures, equipment, apparatus and other items indicated on the Drawings and not mentioned in the Specifications, or vice versa, and all work and material usual and necessary to make the Work complete in all its parts, including all incidental work necessary to make it complete and satisfactory and ready for use and operation, whether

SAMPLE

or not they are indicated on the Drawings or mentioned in the Specifications, shall be furnished and executed the same as if they were called for both by the Drawings and by the Specifications.

The Contractor shall coordinate his operations with those of any other contractors who may be employed on other work of the City, shall avoid interference therewith, and shall cooperate in the arrangements for storage of materials and equipment.

The Contractor shall conduct his work so as to interfere as little as possible with private business and public travel. Wherever and whenever necessary or required, he shall maintain fences, furnish watchmen, maintain lights, and take such other precaution as may be necessary to protect life and property.

The Contractor shall indemnify and save harmless the City and its officers, agents, servants and employees, from and against any and all claims, demands, suits, proceedings, liabilities, judgments, awards, losses, damages, costs and expenses, including attorneys' fees, on account of bodily injury, sickness, disease or death sustained by any person or persons or injury or damage to or destruction of any property, directly or indirectly arising out of, relating to or in connection with the Work, whether or not due to or claimed to be due in whole or in part to the active, passive or concurrent negligence or fault of the Contractor, his officers, agents, servants or employees, any of his subcontractors, the City or any of their respective officers, agents, servants or employees and/or any other person or persons, and whether or not such claims, demands, suits or proceedings are just, unjust, groundless, false or fraudulent; and the Contractor shall and does hereby assume and agrees to pay for the defense of all such claims, demands, suits and proceedings, provided, however, that the Contractor shall not be required to indemnify the City, its officers, agents, servants, or employees, against any such damages occasioned solely by acts or omissions of the owner other than supervisory acts or omissions of the City in the Work.

The Contractor shall have complete responsibility for the Work and the protection thereof, and for preventing injuries to persons and damage to the Work and property and utilities on or about the Work, until final completion and final acceptance thereof. He shall in no way be relieved of his responsibility by any right of the City to give permission or directions relating to any part of the Work, by any such permission or directions given, or by failure of the City to give such permission or directions. The Contractor shall bear all costs, expenses, losses and damages on account of the quantity or character of the Work or the nature of the land (including but not limited to subsurface conditions) in or under or on which the Work is done being different from that indicated or shown in the Contract Documents or from what was estimated or expected, or on account of the weather, elements, or other causes unless information regarding such condition(s) was known and not disclosed by the City prior to Contractor commencing its work.

The Contractor shall conduct his operations so as not to damage existing structures or work installed either by him or by other contractors. In case of any such damage resulting from his operations, he shall repair and make good as new the damaged portions at his own expense with the consent of the damaged party. In the event that consent is not given, the Contractor shall continue liable for the damage caused.

The Contractor shall be as fully responsible to the City for the acts and omissions of his subcontractors, their officers, agents, servants and employees as he is for his own acts and omissions and those of his own officers, agents, servants and employees.

Should the Contractor sustain any loss, damage or delay through any act or omission of any other contractor or any subcontractor of any such other contractor, the Contractor shall have no claim against the City therefor, other than for an extension of time, but shall have recourse solely to such other contractor or subcontractor.

If any other contractor or any subcontractor of any such other contractor shall suffer or claim to have suffered loss, damage or delay by reason of the acts or omissions of the Contractor or of any of his subcontractors, the Contractor agrees to assume the defense against any such claim and to reimburse such other contractor or subcontractor for such loss or damage.

The Contractor agrees to and does hereby indemnify and save harmless the City from and against any and all claims by such other contractors or subcontractors alleging such loss, damage or delay and from and against any and all claims, demands, suits, proceedings, liabilities, judgments, awards, losses, damages, costs and expenses, including attorneys' fees, arising out of, relating to or resulting from such claims.

SAMPLE

The Contractor shall promptly pay all federal, state and local taxes which may be assessed against him in connection with the Work or his operations under this Agreement and/or the other Contract Documents, including, but not limited to, taxes attributable to the purchase of material and equipment, to the performance of services, and the employment of persons in the prosecution of the Work.

Because (i) anticipated damages hereunder are uncertain in amount and difficult to prove, (ii) the parties hereto wish to liquidate said damages in advance, and (iii) monies paid pursuant to this Agreement are not greatly disproportionate to the damage reasonably anticipated in the event of default, it is further agreed that if Contractor shall not complete all of its obligations under this contract within the time period and by the completion date specified in Paragraph 2 herein, Contractor shall pay liquidated damages to the City at a rate of $___100_____ per day for every day beyond the completion date until such time as the Contractor finally completes all of its obligations under this Contract.

6. Supervision Of Work: The Contractor shall be solely responsible for supervision of the Work, shall give the work the constant attention necessary to ensure the expeditious and orderly progress thereof, and shall cooperate with the City, its officers, agents or employees in every possible way.

At all times, the Contractor shall have as his agent on the Work a competent superintendent capable of reading and thoroughly understanding the Drawings and Specifications, with full authority to execute the directions of the Engineer without delay and to supply promptly such labor, services, materials, equipment, plant, apparatus, appliances, tools, supplies and other items as may be required. Such superintendent shall not be removed from the Work without the prior written consent of the City. If, in the opinion of the City, the superintendent or any successor proves incompetent, the Contractor shall replace him with another person approved by the City; such approval, however, shall in no way relieve or diminish the Contractor's responsibility for supervision of the Work.

Whenever the Contractor or his agent or superintendent is not present on any part of the Work where it may be necessary to give directions or instructions with respect to such work, such directions or instructions may be given by the City to and shall be received and obeyed by the foreman or any other person in charge of the particular work involved.

7. Insurance: The Contractor shall procure and maintain insurance of the types specified below, and to the limits for this insurance specified in the Standard Bid and Contract Terms and Conditions and the City of New London Code of Ordinances, Article IV., Section 2-71. All insurance shall be obtained from companies satisfactory to the City.

Insurance shall be in such forms as will protect the Contractor from all claims and liability for damages for bodily and personal injury, including accidental death, and for property damage, which may arise from operations under the Contract, whether such operations be by himself, his subcontractors, or by anyone directly or indirectly employed or engaged by him.

The following types of insurance shall be provided before starting and until final completion and acceptance of the Work and expiration of the guarantee period provided for in the Agreement.

a. Workmen's Compensation and Employer's Liability Insurance.

b. Bodily Injury Insurance for operations and completed operations and Contractor's Protective Bodily Injury Insurance.

c. Property Damage Insurance for operations and completed operations and Contractor's Protective Property Damage Insurance, each including coverage for injury to or destruction of wires or pipes and similar property and appurtenant apparatus and the collapse of or structural injury to any building or structure except those on which work under the Contract is being done. Blasting and explosion coverage shall be obtained if there is a need for blasting under the Contract, and no blasting shall be performed until such insurance has been secured.

d. Bodily Injury Insurance covering the operation of all motor vehicles owned by the Contractor.

e. Personal Injury Insurance to cover claims for personal injury and including claims brought by employees.

f. Property Damage Insurance covering the operation of all motor vehicles owned by the Contractor.

g. Insurance to cover bodily injuries and property damage resulting from the use of motor vehicles not owned by the Contractor, while such vehicles are being operated in connection with the prosecution of the Work.

SAMPLE

h. Contractual Liability Insurance covering the liability assumed by the Contractor under the fifth paragraph of that subsection titled “Obligations and Liability of Contractor” of this Agreement.

i. Owner’s Protective Liability and Property Damage Insurance to protect the City and any Engineer against claims for Property damage and for bodily injuries, including accidental death, caused by the operations of the Contractor or his subcontractors on the Work. The policy shall indicate the City and any Engineer as the named insured. A copy of the policy shall be furnished to the City and a Certificate of Insurance shall be furnished to any Engineer.

Any of the above coverages written on a claims made form have an Extended Reporting Period of three years from the termination of the contract.

All policies shall be so written that the owner will be notified in writing of cancellation or restrictive amendment at least 30 days prior to the effective date of such cancellation or amendment.

Certificates from the Contractor’s insurance carriers stating the coverages provided, the limits of liability, and expiration dates shall be filed in triplicate with the Engineer before operations are begun. Such certificates shall be on the form furnished by the Engineer.

The CITY requires that the aggregate limits be maintained by the CONSULTANT as required. It is the responsibility of the CONSULTANT or his representative to notify the CITY if ever or whenever claims reduce the General Aggregate below $1,000,000.

Renewal certificates must be furnished by the Contractor prior to the expiration date of any of the initial insurances.

No insurance required or furnished hereunder shall in any way relieve the Contractor of or diminish any of his responsibilities, obligations and liabilities under the Contract.

8. Contract: This Agreement, which includes all the Contract Document elements listed in paragraph 1 above, forms the Contract between the parties identified in the heading of this document. In the event that any provision of the Contract conflicts with any other provision of this Contract, the decision of the City will be final.

9. Funding and Fiscal Year Appropriations: Appropriations for expenditures by the City and authorization to spend for a particular purpose are ordinarily made on a fiscal year basis. The fiscal year of the City is the twelve (12) month period ending June 30 of each year. The obligations of the City under this Contract for the present or any subsequent fiscal year following the fiscal year in which this Contract is executed are subject to the appropriation of funds sufficient to discharge the City’s obligation, which accrues in this or any subsequent fiscal year. In the absence of such appropriation or authorization, this Contract shall be terminated immediately upon the Contractor’s receipt of notice to said effect without liability for damages, penalties or other charges arising from early termination. Expenditures for Contracted services that will extend beyond a single fiscal year shall not exceed in any fiscal year the amount appropriated and authorized for said fiscal year. The Contractor’s yearly costs, as contained herein, may not exceed the amount appropriated for said year.

10. Termination: The Contract may be terminated without cause by either party by giving written notice to the other at least thirty (30) calendar days prior to the effective date of termination stated in the notice. If Contractor fails to fulfill his obligations, the City may terminate this Contract by giving written notice to the Contractor at least seven (7) calendar days before the effective date of termination stated in the notice. The notice shall state the circumstances of the alleged breach and may state a period during which the alleged breach may be cured, which cure shall be subject to approval by the City.

11. Obligations in Event of Termination:

A. Upon termination, all finished or unfinished documents, data, studies, and reports prepared by the Contractor pursuant to this Contract, shall become the property of the City.

B. The City shall promptly pay the Contractor for all services performed to the effective date of termination, subject to indemnification provisions of Paragraph 5 hereof and subject to offset of sums due the Contractor against sums owed by the Contractor to the City.

12. Record keeping, Audit, and Inspection of Records: The Contractor shall maintain books, records and other compilations of data pertaining to the requirements of the Contract to the extent and in such detail as shall properly

SAMPLE

substantiate claims for payment under the Contract. All such records shall be kept for a period of six (6) years or for such longer period as is specified herein. All retention periods start on the first day after final payment under this Contract. If any litigation, claim, negotiation, audit or other action involving the records is commenced prior to the expiration of the applicable retention period, all records shall be retained until completion of the action and resolution of all issues resulting therefrom, or until the end of the applicable retention period, whichever is later. The Federal grantor agency, the State Auditor, the City, or any of their duly authorized representatives or designees shall have the right at reasonable times and upon reasonable notice, to examine and copy, at reasonable expense, the books, records, and other compilations of data of the Contractor which pertain to the provisions and requirements of this Contract. Such access shall include on-site audits, review, and copying of records.

13. Publicity, Publication, Reproduction and Use of Contract Products or Materials: Unless provided otherwise by law or the City, title and possession of all data, reports, programs, software, equipment, furnishings, and any other documentation or product paid for with City funds shall vest with the City at the termination of the Contract. The Contractor shall at all times obtain the prior written approval of the City before it, any of its officers, agents, employees or subcontractors, either during or after termination of the Contract, makes any statement bearing on the work performed or data collected under this Contract to the press or issues any material for publication through any medium of communication. If the Contractor, or any of its subcontractors, publishes a work dealing with any aspect of performance under the Contract, or of the results and accomplishments attained in such performance, the City shall have a royalty-free non-exclusive and irrevocable license to reproduce, publish or otherwise use and to authorize others to use the publication. The Contractor shall use reasonable means to inform the public that the City provides financial support for its operations and services by explicitly stating on publicity material, stationery, posters and other written materials, and on its premises the following: "This program is supported in part (in full) by the City of New London."

14. Assignment by Contractor and Subcontracting: The Contractor shall not assign or in any way transfer any interest in this Contract without the prior written consent of the City, nor shall he subcontract any services without the prior written approval of the City.

15. Connecticut Law: It is agreed that this contract shall be governed by, construed, and enforced in accordance with the internal laws of the State of Connecticut.

16. Venue: In the event of litigation, the parties do agree to be contractually bound to submit themselves to the personal jurisdiction of the state courts of Connecticut. The venue for any court proceeding shall be in the Superior Court for the Judicial District for New London at New London, Connecticut.

17. Waiver of Jury Trial: CONTRACTOR HEREBY EXPRESSLY WAIVES ANY AND ALL RIGHTS IT MAY HAVE TO TRIAL BY JURY OF ANY CLAIM, DEMAND, ACTION OR CAUSE OF ACTION (1) ARISING UNDER THIS AGREEMENT OR ANY OTHER INSTRUMENT, DOCUMENT OR AGREEMENT EXECUTED OR DELIVERED IN CONNECTION HEREWITH, OR (2) IN ANY WAY CONNECTED WITH OR RELATED OR INCIDENTAL TO THE DEALINGS OF THE PARTIES HERETO OR ANY OF THEM WITH RESPECT TO THIS AGREEMENT OR ANY OTHER INSTRUMENT, DOCUMENT OR AGREEMENT EXECUTED OR DELIVERED IN CONNECTION HEREWITH, OR THE TRANSACTIONS RELATED HERETO OR THERETO, IN EACH CASE WHETHER NOW EXISTING OR HEREAFTER ARISING, AND WHETHER SOUNDING IN CONTRACT OR TORT OR OTHERWISE; AND CONTRACTOR HEREBY AGREES AND CONSENTS THAT ANY SUCH CLAIM, DEMAND, ACTION OR CAUSE OF ACTION SHALL BE DECIDED BY COURT TRIAL WITHOUT A JURY, AND THE CITY MAY FILE AN ORIGINAL COUNTERPART OR A COPY OF THIS SECTION WITH ANY COURT AS WRITTEN EVIDENCE OF CONTRACTOR'S CONSENT TO THE WAIVER OF ITS RIGHT TO TRIAL BY JURY.

18. Nondiscrimination and affirmative action provisions, nondiscrimination provisions regarding sexual orientation, Executive Order Number Three and guidelines and rules, Executive Order Number Seventeen, Executive Order Number Sixteen and sexual harassment policy:

For the purposes of this article, the word "contractor" is substituted for and has the same meaning and effect as if it read "Contractor's name." Section A of this article is inserted in connection with subsection (a) of Section 4a-60 of the General Statutes of Connecticut, as revised. Section B of this article is inserted in connection with subsection (a) of Section 4a-60a of the General Statutes of Connecticut, as revised.

A. (a) For the purposes of this section, "minority business enterprise" means any small contractor or supplier of materials fifty-one percent or more of the capital stock, if any, or assets of which is owned by a person or persons: (1) who are active in the daily affairs of the enterprise, (2) who have the power to direct the management and policies of the enterprise, and (3) who are members of a minority, as such term is defined in subsection (a) of Conn. Gen. Stat. Section

SAMPLE

32-9n; and “good faith” means that degree of diligence which a reasonable person would exercise in the performance of legal duties and obligations. “Good faith efforts” shall include, but not be limited to, those reasonable initial efforts necessary to comply with statutory or regulatory requirements and additional or substituted efforts when it is determined that such initial efforts will not be sufficient to comply with such requirements.

For the purposes of this section, “Commission” means the Commission on Human Rights and Opportunities.

For the purposes of this section, “public works contract” means any agreement between any individual, firm, or corporation and the State or any political subdivision of the State other than a municipality for construction, rehabilitation, conversion, extension, demolition or repair of a public building, highway or other changes or improvements in real property, or which is financed in whole or in part by the State, including, but not limited to, matching expenditures, grants, loans, insurance, or guarantees.

(b) (1) The contractor agrees and warrants that in the performance of the contract such contractor will not discriminate or permit discrimination against any person or group of persons on the grounds of race, color, religious creed, age, marital status, national origin, ancestry, sex, mental retardation, or physical disability, including, but not limited to, blindness, unless it is shown by such contractor that such disability prevents performance of the work involved, in any manner prohibited by the laws of the United States or of the State of Connecticut. The contractor further agrees to take affirmative action to insure that applicants with job-related qualifications are employed and that employees are treated when employed without regard to their race, color, religious creed, age, marital status, national origin, ancestry, sex, mental retardation, or physical disability, including, but not limited to, blindness, unless it is shown by such contractor that such disability prevents performance of the work involved; (2) the contractor agrees, in all solicitations or advertisements for employees placed by or on behalf of the contractor, to state that it is an “affirmative action-equal opportunity employer” in accordance with regulations adopted by the Commission; (3) the contractor agrees to provide each labor union or representative of workers with which such contractor has a collective bargaining agreement or other contract or understanding and each vendor with which such contractor has a contract or understanding, a notice to be provided by the Commission advising the labor union or workers’ representative of the contractor’s commitments under this section, and to post copies of the notice in conspicuous places available to employees and applicants for employment; (4) the contractor agrees to comply with each provision of this section and Conn. Gen. Stat. Sections 46a-68e and 46a-68f and with each regulation or relevant order issued by said commission pursuant to Conn. Gen. Stat. Sections 46a-56, 46a-68e, and 46a-68f; (5) the contractor agrees to provide the Commission on Human Rights and Opportunities with such information requested by the Commission, and permit access to pertinent books, records, and accounts concerning the employment practices and procedures of the contractor as they relate to the provisions of this section and Conn. Gen. Stat. Section 46a-56. If the contract is a public works contract, the contractor agrees and warrants that he will make good faith efforts to employ minority business enterprises as subcontractors and suppliers of materials on such public works project.

(c) Determination of the contractor’s good faith efforts shall include, but shall not be limited to, the following factors: The contractor’s employment and subcontracting policies, patterns and practices; affirmative advertising, recruitment and training; technical assistance activities and such other reasonable activities or efforts as the Commission may prescribe that are designed to ensure the participation of minority business enterprises in public works projects.

(d) The contractor shall develop and maintain adequate documentation, in a manner prescribed by the Commission, of its good faith efforts.

(e) The contractor shall include the provisions of subsection (b) of this section in every subcontract or purchase order entered into in order to fulfill any obligation of a contract with the State and such provisions shall be binding on a subcontractor, vendor, or manufacturer unless exempted by regulations or orders of the Commission. The contractor shall take such action with respect to any such subcontract or purchase order as the Commission may direct as a means of enforcing such provisions including sanctions for noncompliance in accordance with Conn. Gen. Stat. Section 46a-56; provided, if such contractor becomes involved in, or is threatened with, litigation with a subcontractor or vendor as a result of such direction by the Commission, the contractor may request the State of Connecticut to enter into any such litigation or negotiation prior thereto to protect the interests of the State and the State may so enter.

(f) The contractor agrees to comply with the regulations referred to in this section as they exist on the date of this contract and as they may be adopted or amended from time to time during the term of this contract and any amendments thereto.

B. (a) (1) The contractor agrees and warrants that in the performance of the contract such contractor will not discriminate or permit discrimination against any person or group of persons on the grounds of sexual orientation, in any manner prohibited by the laws of the United States or of the State of Connecticut, and that employees are treated when employed without regard to their sexual orientation; (2) the contractor agrees to provide each labor union or representative

SAMPLE

of workers with which such contractor has a collective bargaining agreement or other contract or understanding and each vendor with which such contractor has a contract or understanding, a notice to be provided by the Commission on Human Rights and Opportunities advising the labor union or workers' representative of the contractor's commitments under this section, and to post copies of the notice in conspicuous places available to employees and applicants for employment; (3) the contractor agrees to comply with each provision of this section and with each regulation or relevant order issued by said commission pursuant to Section 46a-56 of the Connecticut General Statutes; (4) the contractor agrees to provide the Commission on Human Rights and Opportunities with such information requested by the Commission, and permit access to pertinent books, records, and accounts concerning the employment practices and procedures of the contractor that relate to the provisions of this section and Section 46a-56 of the Connecticut General Statutes.

(b) The contractor shall include the provisions of subsection (a) of this section in every subcontract or purchase order entered into in order to fulfill any obligation of a contract with the State and such provisions shall be binding on a subcontractor, vendor, or manufacturer unless exempted by regulations or orders of the Commission. The contractor shall take such action with respect to any such subcontract or purchase order as the Commission may direct as a means of enforcing such provisions including sanctions for noncompliance in accordance with Section 46a-56 of the Connecticut General Statutes; provided, if such contractor becomes involved in, or is threatened with, litigation with a subcontractor or vendor as a result of such direction by the Commission, the contractor may request the State of Connecticut to enter into any such litigation or negotiation prior thereto to protect the interests of the State and the State may so enter.

(c) The contractor agrees to comply with the regulations referred to in this section as they exist on the date of this contract and as they may be adopted or amended from time to time during the term of this contract and any amendments thereto.

C. This contract is subject to the provisions of Executive Order No. Three of Governor Thomas J. Meskill promulgated June 16, 1971, and, as such, this contract may be cancelled, terminated, or suspended by the State Labor Commissioner for violation of or noncompliance with said Executive Order No. Three, or any State or federal law concerning nondiscrimination, notwithstanding that the State Labor Commissioner is not a party to this contract. The parties to this contract, as part of the consideration hereof, agree that said Executive Order No. Three is incorporated herein by reference and made a part hereof. The parties agree to abide by said Executive Order and agree that the State Labor Commissioner shall have continuing jurisdiction in respect to contract performance in regard to nondiscrimination, until the contract is completed or terminated prior to completion.

The contractor agrees, as part consideration hereof, that this contract is subject to the Guidelines and Rules issued by the State Labor Commissioner to implement Executive Order No. Three, and that he will not discriminate in his employment practices or policies, will file all reports as required, and will fully cooperate with the State of Connecticut and the State Labor Commissioner.

D. This contract is subject to the provisions of Executive Order No. Seventeen of Governor Thomas J. Meskill promulgated February 15, 1973, and, as such, this contract may be cancelled, terminated, or suspended by the contracting agency or the State Labor Commissioner for violation of or noncompliance with said Executive Order No. Seventeen, notwithstanding that the State Labor Commissioner may not be a party to this contract. The parties to this contract, as part of the consideration hereof, agree that Executive Order No. Seventeen is incorporated herein by reference and made a part hereof. The parties agree to abide by said Executive Order and agree that the contracting agency and the State Labor Commissioner shall have joint and several continuing jurisdiction in respect to contract performance in regard to listing all employment openings with the Connecticut State Employment Service.

E. This contract is subject to the provisions of Executive Order No. Sixteen of Governor John G. Rowland promulgated August 4, 1999, and, as such, the contract may be canceled, terminated, or suspended by the State for violation of or noncompliance with said Executive Order No. Sixteen. Executive Order No. Sixteen is attached hereto and made a part hereof. The parties agree to comply with such executive order. In addition, the contractor agrees to include a copy of Executive Order No. Sixteen, and the requirement to comply with said executive order, in all contracts with its contractors, subcontractors, consultants, sub-consultants, and vendors.

F. This contract is subject to the provisions of the City of New London Sexual Harassment Policy ("Policy") and, as such, the contract may be canceled, terminated, or suspended by the City in the event that the contractor, its employees, contractors, subcontractors, consultants, sub-consultants, or vendors engages in behavior prohibited by the provisions of the Policy (a copy of the Policy is attached hereto). The contractor agrees to include a copy of the Policy, and the requirement to prevent behavior as defined in such Policy, in all contracts with its contractors, subcontractors, consultants, sub-consultants, and vendors.

SAMPLE

19. Force Majeure: Neither party shall be liable to the other or be deemed to be in breach of this Contract for any failure or delay in rendering performance arising out of causes beyond its reasonable control and without its fault or negligence. Such causes may include, but are not limited to, acts of God or of a public enemy, fires, floods, epidemics, quarantine restrictions, strikes, freight embargoes, or unusually severe weather. Dates or times of performance shall be extended to the extent of delays excused by this section, provided that the party whose performance is affected notifies the other promptly of the existence and nature of such delay.

20. Compliance with Laws and Indemnification of the City of New London: The Contractor shall comply with all applicable laws, rules, regulations, ordinances, orders or requirements of the State of Connecticut and any governmental authority relating to the delivery of the services specified in this Contract. The City may require the Contractor to pay fines, penalties, and damages that may arise out of or may be imposed because of, the
Contractor's breach or failure to comply with the provisions of this Contract. Unless otherwise provided by law the Contractor shall indemnify and hold harmless the City, its agents, officers and employees against any and all liability, loss, damages, penalties, costs or expenses for personal injury or damage to real or tangible personal property which the City may sustain, incur or be required to pay resulting from, arising out of, or in connection with the services performed or delivered under this Contract by reason of acts, inactions, omissions, negligence, reckless or intentional misconduct of the Contractor, its agent(s), officers, employees or subcontractors; provided that the Contractor is notified of any claim within a reasonable time after the City becomes aware of it, and the Contractor is afforded an opportunity to participate in the defense of such claim. In such event, no negotiated settlement agreement shall be binding on the Contractor without the Contractor's concurrence.

21. Waivers And Severability: All conditions, covenants, duties and obligations contained in this Contract can be waived only by written agreement. Forbearance or indulgence in any form or manner by a party shall not be construed as a waiver, nor in any way limit the legal or equitable remedies available to that party. A waiver or breach of any term, condition, or covenant by a party shall not constitute a waiver or breach of any other term, condition or covenant. If any court of competent jurisdiction declares a provision of this Agreement invalid, illegal, or otherwise unenforceable, the remaining provisions of the Agreement shall remain in full force and effect.

22. Amendments: No amendment to this Contract shall be effective unless it is signed by authorized representatives of both parties and complies with all other regulations and requirements of law.

23. Entire Agreement: The parties understand and agree that this Contract and attachments (if any), which includes all Contract Documents, supersede all other verbal and written agreements and negotiations by the parties relating to the services under this Contract.

24. Notice: Unless otherwise specified in an attachment hereto, any notice hereunder shall be in writing addressed to the persons and addresses indicated in the caption of this Contract on page 1.

IN WITNESS WHEREOF, the parties hereto have caused this AGREEMENT to be executed in two (2) original copies on the day and year first above written.

OWNER:

_____
Michael Passero
Its Mayor

CONTRACTOR:

_____
Its Duly Authorized Agent

Approved as to form:

_____
Jeffrey T. Londregan, Esq., Director of Law

Date Signed _____

SAMPLE

CONSTRUCTION PERFORMANCE BOND

PERFORMANCE BOND

KNOW ALL MEN BY THESE PRESENTS:

That _____ as Principal, hereinafter called Contractor, and _____ as Surety, hereinafter called Surety, are held and firmly bound unto _____ as Obligee, hereinafter called Owner, in the amount of _____ _____ Dollars ($_____), for payment whereof Principal and Surety bind themselves, their heirs, executors, administrators, successors and assigns, jointly and severally, firmly by these presents.

WHEREAS, Contract has by written agreement dated _____ entered into a Contract

with Owner for _____

_____

_____

which Contract is by reference made a part hereof, and is hereinafter referred to as the Contract.

NOW, THEREFORE, the condition of this obligation is such that, if Contractor shall promptly and faithfully perform said Contract, including such remedial work as may be required under the guaranty during the period of guaranty and shall certify in writing that all wages paid under said Contract to any mechanic, laborer or workman were equal to the rates or wages customary or then prevailing for the same trade or occupation in Connecticut, then this obligation shall be null and void, otherwise it shall remain in full force and effect.

The Surety hereby waives notice of any alteration or extension of time made by the Owner.

Whenever Contractor shall he, and declared by Owner to be in default under the Contract, the Owner having performed Owner's obligations thereunder, the Surety may promptly remedy the default or shall promptly:

(1) Complete the Contract in accordance with its terms and conditions, by another Contractor acceptable to the Owner, said other Contractor to act as an agent for the Surety, or

(2) Obtain a Bid or Bids for submission to the Owner for completing the Contract in accordance with its terms and conditions, and upon determination by the Owner and Surety of the lowest responsible Bidder, arrange for a Contract as work progresses (even though there should be a default or a succession of defaults under the Contract or Contracts of completion arranged under this paragraph) sufficient funds to pay the cost of completion less the balance of the contract price, but not exceeding, including, other costs and damages for which the Surety may be liable hereunder, the amount set forth in the first paragraph hereof. The terms "balance of the contract price" , as used in this paragraph, shall mean the total amount payable by the Owner to the Contractor under the Contract and any amendments thereto, less the amount properly paid by the Owner to the Contractor.

Unless otherwise required by law, any suit under this Bond must be instituted before the expiration of one (1) year from the date on which the guaranty period under the Contract expires.

No right of action shall accrue on this Bond to or for the use of any person or corporation other than the Owner named herein or the heirs, executors, administrators and successors of the Owner.

IN WITNESS WHEREOF, the above-bounded parties have executed this instrument under their several seals this _____ _____ day of _____, 20____, the name and corporate seal of each corporate party being hereto affixed and these presents signed by its undersigned representative, pursuant to authority of its governing body.

No extension of time or other modification of this Bid Bond shall be valid unless agreed in writing by the parties to this Bond.

_____
(Corporate Principal)

_____

Attest: _____
(Business Address)

_____ By _____ Affix Corporate Seal

_____
(Corporate Surety)

_____

Attest: _____
(Business Address)

_____ By _____ Affix Corporate Seal

Countersigned
by _____

Attorney-in-Fact, State of _____, Power-of- Attorney for person signing for Surety Company must be attached to Bond.

CERTIFICATE AS TO CORPORATE PRINCIPAL

I, _____ certify that I am the _____ _____, of the Corporation named as Principal in the within bond; that _____ _____ who signed the said bond on behalf of the Principal was then the _____ _____ of said corporation; that I know his signature, and his signature thereto is genuine; and that said bond was duly signed, sealed, and attested to for and in behalf of said corporation by authority of this governing body.

_____ Affix Corporate Seal

Title _____

CONSTRUCTION PAYMENT BOND

LABOR AND MATERIAL PAYMENT BOND

KNOW ALL MEN BY THESE PRESENTS:

That _____, as Principal

(hereinafter called Principal) and _____
as Surety, (hereinafter called Surety) are held and firmly bound unto _____
_____ as Obligee (hereinafter called Owner), for the use and benefit of claimants as hereinbelow defined;
in the amount of _____ Dollars ($_
_____) for the payment whereof the Principal and Surety bind themselves, their heirs, executors, administrators, successors and assigns, jointly and severally, firmly by these presents.

WHEREAS, Principal has by written agreement dated _____ entered into a Contract with the owner for _____

_____

_____
which Contract is by reference made a part hereof, and is hereinafter referred to as the Contract.

NOW, THEREFORE, the condition of this obligation is such that, if the said Principal shall promptly pay for all materials furnished and labor supplied or performed in the prosecution of the work included in and under the aforesaid Contract, whether or not the material or labor enters into and becomes a component part of the real asset, then this obligation shall be null and void otherwise it shall remain in full force and effect.

PROVIDED, that any alterations which may be made in the terms of the Contract or in the work to be done under it, or the giving by the Owner or any other forbearance on the part of either the Owner or the Principal to the other shall not in any way release the Principal and the Surety or either or any of them, their heirs, executors, administrators, successors or assigns from their liability hereunder, notice to the Surety for any such alterations, extension or forbearance being hereby waived.

Any party, whether a subcontractor or otherwise, who furnished materials or supplies or performs labor or services in the prosecution of the work under said Contract, and who is not paid therefore, may bring a suit on this Bond in the name of the person suing, prosecute the same to a final judgment and have the execution thereon for such sum as may be justly due.

IN WITNESS WHEREOF, the above-bounded parties have executed this instrument under their several seals this _____ _____ day of _____, 20____, the name and corporate seal of each corporate party being hereto affixed and these presents signed by its undersigned representative, pursuant to authority of its governing body.

_____
(Corporate Principal)

_____

Attest: _____
(Business Address)

_____ By _____ Affix Corporate Seal

_____
(Corporate Surety)

_____

Attest: _____
(Business Address)

_____ By _____ Affix Corporate Seal

Countersigned
by _____

Attorney-in-Fact, State of _____, Power-of- Attorney for person signing for Surety Company must be attached to Bond.

AFFIRMATIVE ACTION/EQUAL EMPLOYMENT OPPORTUNITY

AFFIRMATIVE ACTION POLICY STATEMENT

(must be submitted on your firm's letterhead)

It has always been the policy and will continue to be the strong commitment of _____ _____ and all contractors and subcontractors who do business with this City to provide equal opportunities in employment to all qualified persons solely on the basis of job-related skills, ability and merit. _____will continue to take Affirmative Action to ensure that applicants are employed and that employees are treated during employment without regard to their race, color, religion, sex, national origin, ancestry, mental disorder (present or past history thereof), age, physical disability (but not limited to blindness), marital status, mental retardation, and criminal record. Such action includes, but is not limited to, employment, upgrading, demotion or transfer; recruitment or recruitment advertising; layoff or termination; rates of pay or other forms of compensation and selection for training including apprenticeship._____ _____, and its subcontractors will continue to make good faith efforts to comply with all federal and state laws and policies which speak to equal employment opportunity.

The principles of Affirmative Action are addressed in the 13th, 14th, and 15th Amendments of the United States Constitution, Civil Rights Act of 1866, 1870, 1871, Equal Pay Act of 1963, Title VI and VII of - the 1964 United States Civil Rights Act, Presidential Executive Orders 11246, amended by 11375, (nondiscrimination under federal contracts), Act I, Sections 1 and 20 of the Connecticut Constitution, Governor Grasso's Executive Order Number 11, Governor O'Neill's Executive Order Number 9, the Connecticut Fair Employment Practices Law (Sec. 46a-60-69) of the Connecticut General Statutes, Connecticut Code of Fair Practices (46a-70-81), Deprivation of Civil Rights (46a-58(a)(d)), Public Accommodations Law (46a-63-64), Discrimination against Criminal Offenders (46a-80), definition of Blind (46a-51(1)), definition of Physically Disabled (46a-51(15)), definition. of Mentally Retarded (46a-51(13)), cooperation with the Commission on Human Rights and Opportunities (46 - 77), Sexual Harassment (46a-60(a)-8), Connecticut Credit Discrimination Law (36-436 through 439), Title I of the State and Local Fiscal Assistance Act of 1972.

This Affirmative Action Policy Statement re-affirms my personal commitment to the principles of Equal Employment Opportunity.

_____ _____

DATE Signature of Authorized Signer

CERTIFICATION OF BIDDER REGARDING EQUAL EMPLOYMENT OPPORTUNITY

INSTRUCTIONS

This certification is required pursuant to Executive Order 11246 Part II, Section 203(b), (30 FR 12319, 12935). The implementing rules and regulations provide that any bidder or prospective contractor, or any of its proposed subcontractors, shall state whether it has participated in any previous contract or subcontract subject to the equal opportunity clause; and, if so, whether it has filed all compliance reports due under applicable instructions.

Where the certification indicated that the bidder has not filed a compliance report due under applicable instructions, such bidder shall be required to submit a compliance report within seven (7) calendar days after bid opening. No contract shall be awarded unless such report is submitted.

CERTIFICATION BY BIDDER

Bidder's Name _____

Address and Zip Code _____

_____

1. Bidder has participated in a previous contract or subcontract subject to the Equal Opportunity Clause.

   Yes ( ) No ( ) If answer is yes, identify the most recent contract.

2. Compliance reports were required to be filed in connection with such contract or subcontract
   Yes ( ) No ( ) If answer is yes, identify the most recent contract.

3. Bidder has filed all compliance reports due under applicable instructions, including SF. 100.
   Yes ( ) No ( ) Not Required ( )

4. If answer to Item 3 is "No" please explain in detail on reverse side of this Certification.

Certification - The information above is true and complete to the best of my knowledge and belief. A willfully false statement is punishable by law (U.S. Code, Title 18, Section 1001).

_____
Name and Title of Signer (Please Type)

_____ _____
Signature Date

CERTIFICATION OF NON-SEGREGATED FACILITIES

This Bidder certifies that he does not maintain or provide his employees any segregated facilities at any of his establishments, and that he does not permit his employees to perform their services at any location, under his control, where segregated facilities are maintained. The Bidder certifies further that he will not maintain or provide for his employees any segregated facilities at any of his establishments, and that he will not permit his employees to perform their services at any locations, under his control, where segregated facilities are maintained. The Bidder agrees that a breach of his certification will be a violation of the Equal Opportunity clause and any Contract resulting from acceptance of this Bid. As used in this certification, the term "segregated facilities" means any waiting rooms, work areas, restrooms and washrooms, restaurants and other eating areas, timeclocks, locker rooms and other storage or dressing areas, parking lots, drinking fountains, recreation or entertainment areas, transportation, and housing facilities provided for employees which are segregated by explicit directive or are, in fact, segregated on the basis of race, color, religion or national origin, because of habit, local custom or otherwise. The Bidder agrees that (except where he has obtained identical certification from proposed Subcontractors for specific time periods) he will obtain identical certifications from proposed Subcontractors prior to the award of Subcontracts exceeding $10,000 which are not exempt form the provisions of the Equal Opportunity clause; that he will retain such certifications in his files; and that he will forward the following notice to such proposed subcontractors (except where the proposed subcontractors have already submitted identical certifications for the specific time periods):

> “Notice to prospective subcontractors of requirements for non-segregated facilities. A certification of non-segregated facilities must be submitted prior to the award of a subcontract exceeding the Equal Opportunity Clause. The certification may be submitted either for each subcontract or for all subcontracts during a period (i.e. quarterly, semi-annually, or annually).

Note: The penalty for making false statements in offers is prescribed in 18 U.S.C. Paragraph 1001.

Date: _____ By: _____

Official Address: _____ Title: _____

_____

CERTIFICATION OF BIDDER REGARDING EQUAL EMPLOYMENT OPPORTUNITY

INSTRUCTIONS

This certification is required pursuant to Executive Order 11246 Part II, Section 203(b), (30 FR 12319, 12935). The implementing rules and regulations provide that any bidder or prospective contractor, or any of its proposed subcontractors, shall state whether it has participated in any previous contract or subcontract subject to the equal opportunity clause; and, if so, whether it has filed all compliance reports due under applicable instructions.

Where the certification indicated that the bidder has not filed a compliance report due under applicable instructions, such bidder shall be required to submit a compliance report within seven (7) calendar days after bid opening. No contract shall be awarded unless such report is submitted.

CERTIFICATION BY BIDDER

Bidder's Name _____

Address and Zip Code _____

_____

1. Bidder has participated in a previous contract or subcontract subject to the Equal Opportunity Clause.

   Yes ( ) No ( ) If answer is yes, identify the most recent contract.

2. Compliance reports were required to be filed in connection with such contract or subcontract
   Yes ( ) No ( ) If answer is yes, identify the most recent contract.

3. Bidder has filed all compliance reports due under applicable instructions, including SF. 100.
   Yes ( ) No ( ) Not Required ( )

4. If answer to Item 3 is "No" please explain in detail on reverse side of this Certification.

Certification - The information above is true and complete to the best of my knowledge and belief. A willfully false statement is punishable by law (U.S. Code, Title 18, Section 1001).

_____
Name and Title of Signer (Please Type)

_____ _____
Signature Date

ANTI-FRACKING PROVISION

City of New London

Department of Finance-Purchasing Agent
13 Masonic Street • New London, CT 06320 • Phone (860) 447-5215 • Fax (860) 447-5297

Anti-Fracking Provision

We _____ hereby submit a bid for materials, equipment and/or labor for the City of New London. The Bid is for bid documents titled **Bid No. 2021-12 City of New London Multi-Use Trail**. We hereby certify under penalty of perjury that no natural gas waste or oil waste will be used by the undersigned bidder or any contractor, sub-contractor, agent or vendor agent in connection with the bid; nor will the undersigned bidder or any sub-contractor, agent or vendor agent thereof apply any natural gas waste or oil waste to any road or real property within the City of New London as a result of the submittal of this bid if selected.

_____ DATE

_____ Signature of Authorized Signer

TAB C

General Conditions

This document has important legal consequences; consultation with an attorney is encouraged with respect to its use or modification. This document should be adapted to the particular circumstances of the contemplated Project and the controlling Laws and Regulations.

STANDARD GENERAL CONDITIONS OF THE CONSTRUCTION CONTRACT

Prepared by

EJCDC®
ENGINEERS JOINT CONTRACT DOCUMENTS COMMITTEE

Issued and Published Jointly by

ACEC
AMERICAN COUNCIL OF ENGINEERING COMPANIES

ASCE
AMERICAN SOCIETY OF CIVIL ENGINEERS

National Society of Professional Engineers®

Endorsed by

CSI NUCA
REPRESENTING UTILITY & EXCAVATION CONTRACTORS

EJCDC® C-700 (Rev. 1), Standard General Conditions of the Construction Contract.
Copyright © 2013 National Society of Professional Engineers, American Council of Engineering Companies, and American Society of Civil Engineers. All rights reserved.

These General Conditions have been prepared for use with the Agreement Between Owner and Contractor for Construction Contract (EJCDC® C-520, Stipulated Sum, or C-525, Cost-Plus, 2013 Editions). Their provisions are interrelated and a change in one may necessitate a change in the other.

To prepare supplementary conditions that are coordinated with the General Conditions, use EJCDC's Guide to the Preparation of Supplementary Conditions (EJCDC® C-800, 2013 Edition). The full EJCDC Construction series of documents is discussed in the Commentary on the 2013 EJCDC Construction Documents (EJCDC® C-001, 2013 Edition).

Copyright © 2013:

National Society of Professional Engineers

1420 King Street, Alexandria, VA 22314-2794

(703) 684-2882

www.nspe.org

American Council of Engineering Companies

1015 15th Street N.W., Washington, DC 20005

(202) 347-7474

www.acec.org

American Society of Civil Engineers

1801 Alexander Bell Drive, Reston, VA 20191-4400

(800) 548-2723

www.asce.org

The copyright for this document is owned jointly by the three sponsoring organizations listed above. The National Society of Professional Engineers is the Copyright Administrator for the EJCDC documents; please direct all inquiries regarding EJCDC copyrights to NSPE.

NOTE: EJCDC publications may be purchased at www.ejcdc.org, or from any of the sponsoring organizations above.

Copyright © 2013 National Society of Professional Engineers, American Council of Engineering Companies, and American Society of Civil Engineers. All rights reserved.

STANDARD GENERAL CONDITIONS OF THE CONSTRUCTION CONTRACT

TABLE OF CONTENTS

Page

Article 1 – Definitions and Terminology 1

1.01 Defined Terms 1

1.02 Terminology 5

Article 2 – Preliminary Matters 6

2.01 Delivery of Bonds and Evidence of Insurance 6

2.02 Copies of Documents 6

2.03 Before Starting Construction 6

2.04 Preconstruction Conference; Designation of Authorized Representatives 7

2.05 Initial Acceptance of Schedules 7

2.06 Electronic Transmittals 7

Article 3 – Documents: Intent, Requirements, Reuse 8

3.01 Intent 8

3.02 Reference Standards 8

3.03 Reporting and Resolving Discrepancies 8

3.04 Requirements of the Contract Documents 9

3.05 Reuse of Documents 10

Article 4 – Commencement and Progress of the Work 10

4.01 Commencement of Contract Times; Notice to Proceed 10

4.02 Starting the Work 10

4.03 Reference Points 10

4.04 Progress Schedule 10

4.05 Delays in Contractor's Progress 11

Article 5 – Availability of Lands; Subsurface and Physical Conditions; Hazardous Environmental Conditions 12

5.01 Availability of Lands 12

5.02 Use of Site and Other Areas 12

5.03 Subsurface and Physical Conditions 13

5.04 Differing Subsurface or Physical Conditions 14

5.05 Underground Facilities 15

Copyright © 2013 National Society of Professional Engineers, American Council of Engineering Companies, and American Society of Civil Engineers. All rights reserved.

5.06 Hazardous Environmental Conditions at Site 17
Article 6 – Bonds and Insurance 19
6.01 Performance, Payment, and Other Bonds 19
6.02 Insurance—General Provisions 19
6.03 Contractor's Insurance 20
6.04 Owner's Liability Insurance 23
6.05 Property Insurance 23
6.06 Waiver of Rights 25
6.07 Receipt and Application of Property Insurance Proceeds 25
Article 7 – Contractor's Responsibilities 26
7.01 Supervision and Superintendence 26
7.02 Labor; Working Hours 26
7.03 Services, Materials, and Equipment 26
7.04 "Or Equals" 27
7.05 Substitutes 28
7.06 Concerning Subcontractors, Suppliers, and Others 29
7.07 Patent Fees and Royalties 31
7.08 Permits 31
7.09 Taxes 32
7.10 Laws and Regulations 32
7.11 Record Documents 32
7.12 Safety and Protection 32
7.13 Safety Representative 33
7.14 Hazard Communication Programs 33
7.15 Emergencies 34
7.16 Shop Drawings, Samples, and Other Submittals 34
7.17 Contractor's General Warranty and Guarantee 36
7.18 Indemnification 37
7.19 Delegation of Professional Design Services 37
Article 8 – Other Work at the Site 38
8.01 Other Work 38
8.02 Coordination 39
8.03 Legal Relationships 39

Copyright © 2013 National Society of Professional Engineers, American Council of Engineering Companies, and American Society of Civil Engineers. All rights reserved.

Article 9 – Owner's Responsibilities 40
9.01 Communications to Contractor 40
9.02 Replacement of Engineer 40
9.03 Furnish Data 40
9.04 Pay When Due 40
9.05 Lands and Easements; Reports, Tests, and Drawings 40
9.06 Insurance 40
9.07 Change Orders 40
9.08 Inspections, Tests, and Approvals 41
9.09 Limitations on Owner's Responsibilities 41
9.10 Undisclosed Hazardous Environmental Condition 41
9.11 Evidence of Financial Arrangements 41
9.12 Safety Programs 41
Article 10 – Engineer's Status During Construction 41
10.01 Owner's Representative 41
10.02 Visits to Site 41
10.03 Project Representative 42
10.04 Rejecting Defective Work 42
10.05 Shop Drawings, Change Orders and Payments 42
10.06 Determinations for Unit Price Work 42
10.07 Decisions on Requirements of Contract Documents and Acceptability of Work 42
10.08 Limitations on Engineer's Authority and Responsibilities 42
10.09 Compliance with Safety Program 43
Article 11 – Amending the Contract Documents; Changes in the Work 43
11.01 Amending and Supplementing Contract Documents 43
11.02 Owner-Authorized Changes in the Work 44
11.03 Unauthorized Changes in the Work 44
11.04 Change of Contract Price 44
11.05 Change of Contract Times 45
11.06 Change Proposals 45
11.07 Execution of Change Orders 46
11.08 Notification to Surety 47
Article 12 – Claims 47

Copyright © 2013 National Society of Professional Engineers, American Council of Engineering Companies, and American Society of Civil Engineers. All rights reserved.

12.01 Claims 47
Article 13 – Cost of the Work; Allowances; Unit Price Work 48
13.01 Cost of the Work 48
13.02 Allowances 50
13.03 Unit Price Work 51
Article 14 – Tests and Inspections; Correction, Removal or Acceptance of Defective Work 52
14.01 Access to Work 52
14.02 Tests, Inspections, and Approvals 52
14.03 Defective Work 53
14.04 Acceptance of Defective Work 53
14.05 Uncovering Work 53
14.06 Owner May Stop the Work 54
14.07 Owner May Correct Defective Work 54
Article 15 – Payments to Contractor; Set-Offs; Completion; Correction Period 55
15.01 Progress Payments 55
15.02 Contractor's Warranty of Title 58
15.03 Substantial Completion 58
15.04 Partial Use or Occupancy 59
15.05 Final Inspection 59
15.06 Final Payment 59
15.07 Waiver of Claims 61
15.08 Correction Period 61
Article 16 – Suspension of Work and Termination 62
16.01 Owner May Suspend Work 62
16.02 Owner May Terminate for Cause 62
16.03 Owner May Terminate For Convenience 63
16.04 Contractor May Stop Work or Terminate 63
Article 17 – Final Resolution of Disputes 64
17.01 Methods and Procedures 64
Article 18 – Miscellaneous 64
18.01 Giving Notice 64
18.02 Computation of Times 64
18.03 Cumulative Remedies 64

Copyright © 2013 National Society of Professional Engineers, American Council of Engineering Companies, and American Society of Civil Engineers. All rights reserved.

18.04 Limitation of Damages 65
18.05 No Waiver 65
18.06 Survival of Obligations 65
18.07 Controlling Law 65
18.08 Headings 65

Copyright © 2013 National Society of Professional Engineers, American Council of Engineering Companies, and American Society of Civil Engineers. All rights reserved.

ARTICLE 1 – DEFINITIONS AND TERMINOLOGY

1.01 *Defined Terms*

A. Wherever used in the Bidding Requirements or Contract Documents, a term printed with initial capital letters, including the term's singular and plural forms, will have the meaning indicated in the definitions below. In addition to terms specifically defined, terms with initial capital letters in the Contract Documents include references to identified articles and paragraphs, and the titles of other documents or forms.

1. *Addenda*—Written or graphic instruments issued prior to the opening of Bids which clarify, correct, or change the Bidding Requirements or the proposed Contract Documents.

2. *Agreement*—The written instrument, executed by Owner and Contractor, that sets forth the Contract Price and Contract Times, identifies the parties and the Engineer, and designates the specific items that are Contract Documents.

3. *Application for Payment*—The form acceptable to Engineer which is to be used by Contractor during the course of the Work in requesting progress or final payments and which is to be accompanied by such supporting documentation as is required by the Contract Documents.

4. *Bid*—The offer of a Bidder submitted on the prescribed form setting forth the prices for the Work to be performed.

5. *Bidder*—An individual or entity that submits a Bid to Owner.

6. *Bidding Documents*—The Bidding Requirements, the proposed Contract Documents, and all Addenda.

7. *Bidding Requirements*—The advertisement or invitation to bid, Instructions to Bidders, Bid Bond or other Bid security, if any, the Bid Form, and the Bid with any attachments.

8. *Change Order*—A document which is signed by Contractor and Owner and authorizes an addition, deletion, or revision in the Work or an adjustment in the Contract Price or the Contract Times, or other revision to the Contract, issued on or after the Effective Date of the Contract.

9. *Change Proposal*—A written request by Contractor, duly submitted in compliance with the procedural requirements set forth herein, seeking an adjustment in Contract Price or Contract Times, or both; contesting an initial decision by Engineer concerning the requirements of the Contract Documents or the acceptability of Work under the Contract Documents; challenging a set-off against payments due; or seeking other relief with respect to the terms of the Contract.

10. *Claim*—(a) A demand or assertion by Owner directly to Contractor, duly submitted in compliance with the procedural requirements set forth herein: seeking an adjustment of Contract Price or Contract Times, or both; contesting an initial decision by Engineer concerning the requirements of the Contract Documents or the acceptability of Work under the Contract Documents; contesting Engineer's decision regarding a Change Proposal; seeking resolution of a contractual issue that Engineer has declined to address; or seeking other relief with respect to the terms of the Contract; or (b) a demand or assertion by Contractor directly to Owner, duly submitted in compliance with the procedural requirements set forth herein, contesting Engineer's decision regarding a Change Proposal; or seeking resolution of a contractual issue that Engineer

Copyright © 2013 National Society of Professional Engineers, American Council of Engineering Companies, and American Society of Civil Engineers. All rights reserved.

has declined to address. A demand for money or services by a third party is not a Claim.

11. *Constituent of Concern*—Asbestos, petroleum, radioactive materials, polychlorinated biphenyls (PCBs), hazardous waste, and any substance, product, waste, or other material of any nature whatsoever that is or becomes listed, regulated, or addressed pursuant to (a) the Comprehensive Environmental Response, Compensation and Liability Act, 42 U.S.C. §§9601 et seq. ("CERCLA"); (b) the Hazardous Materials Transportation Act, 49 U.S.C. §§5101 et seq.; (c) the Resource Conservation and Recovery Act, 42 U.S.C. §§6901 et seq. ("RCRA"); (d) the Toxic Substances Control Act, 15 U.S.C. §§2601 et seq.; (e) the Clean Water Act, 33 U.S.C. §§1251 et seq.; (f) the Clean Air Act, 42 U.S.C. §§7401 et seq.; or (g) any other federal, state, or local statute, law, rule, regulation, ordinance, resolution, code, order, or decree regulating, relating to, or imposing liability or standards of conduct concerning, any hazardous, toxic, or dangerous waste, substance, or material.

12. *Contract*—The entire and integrated written contract between the Owner and Contractor concerning the Work.

13. *Contract Documents*—Those items so designated in the Agreement, and which together comprise the Contract.

14. *Contract Price*—The money that Owner has agreed to pay Contractor for completion of the Work in accordance with the Contract Documents. .

15. *Contract Times*—The number of days or the dates by which Contractor shall: (a) achieve Milestones, if any; (b) achieve Substantial Completion; and (c) complete the Work.

16. *Contractor*—The individual or entity with which Owner has contracted for performance of the Work.

17. *Cost of the Work*—See Paragraph 13.01 for definition.

18. *Drawings*—The part of the Contract that graphically shows the scope, extent, and character of the Work to be performed by Contractor.

19. *Effective Date of the Contract*—The date, indicated in the Agreement, on which the Contract becomes effective.

20. *Engineer*—The individual or entity named as such in the Agreement.

21. *Field Order*—A written order issued by Engineer which requires minor changes in the Work but does not change the Contract Price or the Contract Times.

22. *Hazardous Environmental Condition*—The presence at the Site of Constituents of Concern in such quantities or circumstances that may present a danger to persons or property exposed thereto. The presence at the Site of materials that are necessary for the execution of the Work, or that are to be incorporated in the Work, and that are controlled and contained pursuant to industry practices, Laws and Regulations, and the requirements of the Contract, does not establish a Hazardous Environmental Condition.

23. *Laws and Regulations; Laws or Regulations*—Any and all applicable laws, statutes, rules, regulations, ordinances, codes, and orders of any and all governmental bodies, agencies, authorities, and courts having jurisdiction.

Copyright © 2013 National Society of Professional Engineers, American Council of Engineering Companies, and American Society of Civil Engineers. All rights reserved.

24. *Liens*—Charges, security interests, or encumbrances upon Contract-related funds, real property, or personal property.

25. *Milestone*—A principal event in the performance of the Work that the Contract requires Contractor to achieve by an intermediate completion date or by a time prior to Substantial Completion of all the Work.

26. *Notice of Award*—The written notice by Owner to a Bidder of Owner's acceptance of the Bid.

27. *Notice to Proceed*—A written notice by Owner to Contractor fixing the date on which the Contract Times will commence to run and on which Contractor shall start to perform the Work.

28. *Owner*—The individual or entity with which Contractor has contracted regarding the Work, and which has agreed to pay Contractor for the performance of the Work, pursuant to the terms of the Contract.

29. *Progress Schedule*—A schedule, prepared and maintained by Contractor, describing the sequence and duration of the activities comprising the Contractor's plan to accomplish the Work within the Contract Times.

30. *Project*—The total undertaking to be accomplished for Owner by engineers, contractors, and others, including planning, study, design, construction, testing, commissioning, and start-up, and of which the Work to be performed under the Contract Documents is a part.

31. *Project Manual*—The written documents prepared for, or made available for, procuring and constructing the Work, including but not limited to the Bidding Documents or other construction procurement documents, geotechnical and existing conditions information, the Agreement, bond forms, General Conditions, Supplementary Conditions, and Specifications. The contents of the Project Manual may be bound in one or more volumes.

32. *Resident Project Representative*—The authorized representative of Engineer assigned to assist Engineer at the Site. As used herein, the term Resident Project Representative or "RPR" includes any assistants or field staff of Resident Project Representative.

33. *Samples*—Physical examples of materials, equipment, or workmanship that are representative of some portion of the Work and that establish the standards by which such portion of the Work will be judged.

34. *Schedule of Submittals*—A schedule, prepared and maintained by Contractor, of required submittals and the time requirements for Engineer's review of the submittals and the performance of related construction activities.

35. *Schedule of Values*—A schedule, prepared and maintained by Contractor, allocating portions of the Contract Price to various portions of the Work and used as the basis for reviewing Contractor's Applications for Payment.

36. *Shop Drawings*—All drawings, diagrams, illustrations, schedules, and other data or information that are specifically prepared or assembled by or for Contractor and submitted by Contractor to illustrate some portion of the Work. Shop Drawings, whether approved or not, are not Drawings and are not Contract Documents.

Copyright © 2013 National Society of Professional Engineers, American Council of Engineering Companies, and American Society of Civil Engineers. All rights reserved.

37. *Site*—Lands or areas indicated in the Contract Documents as being furnished by Owner upon which the Work is to be performed, including rights-of-way and easements, and such other lands furnished by Owner which are designated for the use of Contractor.

38. *Specifications*—The part of the Contract that consists of written requirements for materials, equipment, systems, standards, and workmanship as applied to the Work, and certain administrative requirements and procedural matters applicable to the Work.

39. *Subcontractor*—An individual or entity having a direct contract with Contractor or with any other Subcontractor for the performance of a part of the Work.

40. *Substantial Completion*—The time at which the Work (or a specified part thereof) has progressed to the point where, in the opinion of Engineer, the Work (or a specified part thereof) is sufficiently complete, in accordance with the Contract Documents, so that the Work (or a specified part thereof) can be utilized for the purposes for which it is intended. The terms "substantially complete" and "substantially completed" as applied to all or part of the Work refer to Substantial Completion thereof.

41. *Successful Bidder*—The Bidder whose Bid the Owner accepts, and to which the Owner makes an award of contract, subject to stated conditions.

42. *Supplementary Conditions*—The part of the Contract that amends or supplements these General Conditions.

43. *Supplier*—A manufacturer, fabricator, supplier, distributor, materialman, or vendor having a direct contract with Contractor or with any Subcontractor to furnish materials or equipment to be incorporated in the Work by Contractor or a Subcontractor.

44. *Technical Data*—Those items expressly identified as Technical Data in the Supplementary Conditions, with respect to either (a) subsurface conditions at the Site, or physical conditions relating to existing surface or subsurface structures at the Site (except Underground Facilities) or (b) Hazardous Environmental Conditions at the Site. If no such express identifications of Technical Data have been made with respect to conditions at the Site, then the data contained in boring logs, recorded measurements of subsurface water levels, laboratory test results, and other factual, objective information regarding conditions at the Site that are set forth in any geotechnical or environmental report prepared for the Project and made available to Contractor are hereby defined as Technical Data with respect to conditions at the Site under Paragraphs 5.03, 5.04, and 5.06.

45. *Underground Facilities*—All underground pipelines, conduits, ducts, cables, wires, manholes, vaults, tanks, tunnels, or other such facilities or attachments, and any encasements containing such facilities, including but not limited to those that convey electricity, gases, steam, liquid petroleum products, telephone or other communications, fiber optic transmissions, cable television, water, wastewater, storm water, other liquids or chemicals, or traffic or other control systems.

46. *Unit Price Work*—Work to be paid for on the basis of unit prices.

47. *Work*—The entire construction or the various separately identifiable parts thereof required to be provided under the Contract Documents. Work includes and is the result of performing or providing all labor, services, and documentation necessary to produce such construction; furnishing, installing, and incorporating all materials and equipment into such construction; and may include related services such as testing, start-up, and commissioning, all as required by the Contract Documents.

Copyright © 2013 National Society of Professional Engineers, American Council of Engineering Companies, and American Society of Civil Engineers. All rights reserved.

48. *Work Change Directive*—A written directive to Contractor issued on or after the Effective Date of the Contract, signed by Owner and recommended by Engineer, ordering an addition, deletion, or revision in the Work.

1.02 *Terminology*

A. The words and terms discussed in the following paragraphs are not defined but, when used in the Bidding Requirements or Contract Documents, have the indicated meaning.

B. *Intent of Certain Terms or Adjectives*:

1. The Contract Documents include the terms "as allowed," "as approved," "as ordered," "as directed" or terms of like effect or import to authorize an exercise of professional judgment by Engineer. In addition, the adjectives "reasonable," "suitable," "acceptable," "proper," "satisfactory," or adjectives of like effect or import are used to describe an action or determination of Engineer as to the Work. It is intended that such exercise of professional judgment, action, or determination will be solely to evaluate, in general, the Work for compliance with the information in the Contract Documents and with the design concept of the Project as a functioning whole as shown or indicated in the Contract Documents (unless there is a specific statement indicating otherwise). The use of any such term or adjective is not intended to and shall not be effective to assign to Engineer any duty or authority to supervise or direct the performance of the Work, or any duty or authority to undertake responsibility contrary to the provisions of Article 10 or any other provision of the Contract Documents.

C. *Day*:

1. The word "day" means a calendar day of 24 hours measured from midnight to the next midnight.

D. *Defective*:

1. The word "defective," when modifying the word "Work," refers to Work that is unsatisfactory, faulty, or deficient in that it:

a. does not conform to the Contract Documents; or

b. does not meet the requirements of any applicable inspection, reference standard, test, or approval referred to in the Contract Documents; or

c. has been damaged prior to Engineer's recommendation of final payment (unless responsibility for the protection thereof has been assumed by Owner at Substantial Completion in accordance with Paragraph 15.03 or 15.04).

E. *Furnish, Install, Perform, Provide*:

1. The word "furnish," when used in connection with services, materials, or equipment, shall mean to supply and deliver said services, materials, or equipment to the Site (or some other specified location) ready for use or installation and in usable or operable condition.

2. The word "install," when used in connection with services, materials, or equipment, shall mean to put into use or place in final position said services, materials, or equipment complete and ready for intended use.

Copyright © 2013 National Society of Professional Engineers, American Council of Engineering Companies, and American Society of Civil Engineers. All rights reserved.

3. The words “perform” or “provide,” when used in connection with services, materials, or equipment, shall mean to furnish and install said services, materials, or equipment complete and ready for intended use.

4. If the Contract Documents establish an obligation of Contractor with respect to specific services, materials, or equipment, but do not expressly use any of the four words “furnish,” “install,” “perform,” or “provide,” then Contractor shall furnish and install said services, materials, or equipment complete and ready for intended use.

F. Unless stated otherwise in the Contract Documents, words or phrases that have a well-known technical or construction industry or trade meaning are used in the Contract Documents in accordance with such recognized meaning.

ARTICLE 2 – PRELIMINARY MATTERS

2.01 *Delivery of Bonds and Evidence of Insurance*

A. *Bonds*: When Contractor delivers the executed counterparts of the Agreement to Owner, Contractor shall also deliver to Owner such bonds as Contractor may be required to furnish.

B. *Evidence of Contractor’s Insurance*: When Contractor delivers the executed counterparts of the Agreement to Owner, Contractor shall also deliver to Owner, with copies to each named insured and additional insured (as identified in the Supplementary Conditions or elsewhere in the Contract), the certificates and other evidence of insurance required to be provided by Contractor in accordance with Article 6.

C. *Evidence of Owner’s Insurance*: After receipt of the executed counterparts of the Agreement and all required bonds and insurance documentation, Owner shall promptly deliver to Contractor, with copies to each named insured and additional insured (as identified in the Supplementary Conditions or otherwise), the certificates and other evidence of insurance required to be provided by Owner under Article 6.

2.02 *Copies of Documents*

A. Owner shall furnish to Contractor four printed copies of the Contract (including one fully executed counterpart of the Agreement), and one copy in electronic portable document format (PDF). Additional printed copies will be furnished upon request at the cost of reproduction.

B. Owner shall maintain and safeguard at least one original printed record version of the Contract, including Drawings and Specifications signed and sealed by Engineer and other design professionals. Owner shall make such original printed record version of the Contract available to Contractor for review. Owner may delegate the responsibilities under this provision to Engineer.

2.03 *Before Starting Construction*

A. *Preliminary Schedules*: Within 10 days after the Effective Date of the Contract (or as otherwise specifically required by the Contract Documents), Contractor shall submit to Engineer for timely review:

1. a preliminary Progress Schedule indicating the times (numbers of days or dates) for starting and completing the various stages of the Work, including any Milestones specified in the Contract;

2. a preliminary Schedule of Submittals; and

Copyright © 2013 National Society of Professional Engineers, American Council of Engineering Companies, and American Society of Civil Engineers. All rights reserved.

3. a preliminary Schedule of Values for all of the Work which includes quantities and prices of items which when added together equal the Contract Price and subdivides the Work into component parts in sufficient detail to serve as the basis for progress payments during performance of the Work. Such prices will include an appropriate amount of overhead and profit applicable to each item of Work.

2.04 *Preconstruction Conference; Designation of Authorized Representatives*

A. Before any Work at the Site is started, a conference attended by Owner, Contractor, Engineer, and others as appropriate will be held to establish a working understanding among the parties as to the Work and to discuss the schedules referred to in Paragraph 2.03.A, procedures for handling Shop Drawings, Samples, and other submittals, processing Applications for Payment, electronic or digital transmittals, and maintaining required records.

B. At this conference Owner and Contractor each shall designate, in writing, a specific individual to act as its authorized representative with respect to the services and responsibilities under the Contract. Such individuals shall have the authority to transmit and receive information, render decisions relative to the Contract, and otherwise act on behalf of each respective party.

2.05 *Initial Acceptance of Schedules*

A. At least 10 days before submission of the first Application for Payment a conference, attended by Contractor, Engineer, and others as appropriate, will be held to review for acceptability to Engineer as provided below the schedules submitted in accordance with Paragraph 2.03.A. Contractor shall have an additional 10 days to make corrections and adjustments and to complete and resubmit the schedules. No progress payment shall be made to Contractor until acceptable schedules are submitted to Engineer.

1. The Progress Schedule will be acceptable to Engineer if it provides an orderly progression of the Work to completion within the Contract Times. Such acceptance will not impose on Engineer responsibility for the Progress Schedule, for sequencing, scheduling, or progress of the Work, nor interfere with or relieve Contractor from Contractor's full responsibility therefor.

2. Contractor's Schedule of Submittals will be acceptable to Engineer if it provides a workable arrangement for reviewing and processing the required submittals.

3. Contractor's Schedule of Values will be acceptable to Engineer as to form and substance if it provides a reasonable allocation of the Contract Price to the component parts of the Work.

2.06 *Electronic Transmittals*

A. Except as otherwise stated elsewhere in the Contract, the Owner, Engineer, and Contractor may transmit, and shall accept, Project-related correspondence, text, data, documents, drawings, information, and graphics, including but not limited to Shop Drawings and other submittals, in electronic media or digital format, either directly, or through access to a secure Project website.

B. If the Contract does not establish protocols for electronic or digital transmittals, then Owner, Engineer, and Contractor shall jointly develop such protocols.

C. When transmitting items in electronic media or digital format, the transmitting party makes no representations as to long term compatibility, usability, or readability of the items resulting from the recipient's use of software application packages, operating systems, or

Copyright © 2013 National Society of Professional Engineers, American Council of Engineering Companies, and American Society of Civil Engineers. All rights reserved.

computer hardware differing from those used in the drafting or transmittal of the items, or from those established in applicable transmittal protocols.

ARTICLE 3 – DOCUMENTS: INTENT, REQUIREMENTS, REUSE

3.01 *Intent*

A. The Contract Documents are complementary; what is required by one is as binding as if required by all.

B. It is the intent of the Contract Documents to describe a functionally complete project (or part thereof) to be constructed in accordance with the Contract Documents.

C. Unless otherwise stated in the Contract Documents, if there is a discrepancy between the electronic or digital versions of the Contract Documents (including any printed copies derived from such electronic or digital versions) and the printed record version, the printed record version shall govern.

D. The Contract supersedes prior negotiations, representations, and agreements, whether written or oral.

E. Engineer will issue clarifications and interpretations of the Contract Documents as provided herein.

3.02 *Reference Standards*

A. Standards Specifications, Codes, Laws and Regulations

1. Reference in the Contract Documents to standard specifications, manuals, reference standards, or codes of any technical society, organization, or association, or to Laws or Regulations, whether such reference be specific or by implication, shall mean the standard specification, manual, reference standard, code, or Laws or Regulations in effect at the time of opening of Bids (or on the Effective Date of the Contract if there were no Bids), except as may be otherwise specifically stated in the Contract Documents.

2. No provision of any such standard specification, manual, reference standard, or code, or any instruction of a Supplier, shall be effective to change the duties or responsibilities of Owner, Contractor, or Engineer, or any of their subcontractors, consultants, agents, or employees, from those set forth in the part of the Contract Documents prepared by or for Engineer. No such provision or instruction shall be effective to assign to Owner, Engineer, or any of their officers, directors, members, partners, employees, agents, consultants, or subcontractors, any duty or authority to supervise or direct the performance of the Work or any duty or authority to undertake responsibility inconsistent with the provisions of the part of the Contract Documents prepared by or for Engineer.

3.03 *Reporting and Resolving Discrepancies*

A. *Reporting Discrepancies*:

1. *Contractor's Verification of Figures and Field Measurements*: Before undertaking each part of the Work, Contractor shall carefully study the Contract Documents, and check and verify pertinent figures and dimensions therein, particularly with respect to applicable field measurements. Contractor shall promptly report in writing to Engineer any conflict, error, ambiguity, or discrepancy that Contractor discovers, or has actual knowledge of, and shall not proceed with any Work affected thereby until the conflict,

Copyright © 2013 National Society of Professional Engineers, American Council of Engineering Companies, and American Society of Civil Engineers. All rights reserved.

error, ambiguity, or discrepancy is resolved, by a clarification or interpretation by Engineer, or by an amendment or supplement to the Contract Documents issued pursuant to Paragraph 11.01.

2. *Contractor's Review of Contract Documents*: If, before or during the performance of the Work, Contractor discovers any conflict, error, ambiguity, or discrepancy within the Contract Documents, or between the Contract Documents and (a) any applicable Law or Regulation, (b) actual field conditions, (c) any standard specification, manual, reference standard, or code, or (d) any instruction of any Supplier, then Contractor shall promptly report it to Engineer in writing. Contractor shall not proceed with the Work affected thereby (except in an emergency as required by Paragraph 7.15) until the conflict, error, ambiguity, or discrepancy is resolved, by a clarification or interpretation by Engineer, or by an amendment or supplement to the Contract Documents issued pursuant to Paragraph 11.01.

3. Contractor shall not be liable to Owner or Engineer for failure to report any conflict, error, ambiguity, or discrepancy in the Contract Documents unless Contractor had actual knowledge thereof.

B. *Resolving Discrepancies*:

1. Except as may be otherwise specifically stated in the Contract Documents, the provisions of the part of the Contract Documents prepared by or for Engineer shall take precedence in resolving any conflict, error, ambiguity, or discrepancy between such provisions of the Contract Documents and:

   a. the provisions of any standard specification, manual, reference standard, or code, or the instruction of any Supplier (whether or not specifically incorporated by reference as a Contract Document); or

   b. the provisions of any Laws or Regulations applicable to the performance of the Work (unless such an interpretation of the provisions of the Contract Documents would result in violation of such Law or Regulation).

3.04 *Requirements of the Contract Documents*

A. During the performance of the Work and until final payment, Contractor and Owner shall submit to the Engineer all matters in question concerning the requirements of the Contract Documents (sometimes referred to as requests for information or interpretation—RFIs), or relating to the acceptability of the Work under the Contract Documents, as soon as possible after such matters arise. Engineer will be the initial interpreter of the requirements of the Contract Documents, and judge of the acceptability of the Work thereunder.

B. Engineer will, with reasonable promptness, render a written clarification, interpretation, or decision on the issue submitted, or initiate an amendment or supplement to the Contract Documents. Engineer's written clarification, interpretation, or decision will be final and binding on Contractor, unless it appeals by submitting a Change Proposal, and on Owner, unless it appeals by filing a Claim.

C. If a submitted matter in question concerns terms and conditions of the Contract Documents that do not involve (1) the performance or acceptability of the Work under the Contract Documents, (2) the design (as set forth in the Drawings, Specifications, or otherwise), or (3) other engineering or technical matters, then Engineer will promptly give written notice to Owner and Contractor that Engineer is unable to provide a decision or interpretation. If Owner and Contractor are unable to agree on resolution of such a matter in question, either party may pursue resolution as provided in Article 12.

Copyright © 2013 National Society of Professional Engineers, American Council of Engineering Companies, and American Society of Civil Engineers. All rights reserved.

3.05 *Reuse of Documents*

A. Contractor and its Subcontractors and Suppliers shall not:

1. have or acquire any title to or ownership rights in any of the Drawings, Specifications, or other documents (or copies of any thereof) prepared by or bearing the seal of Engineer or its consultants, including electronic media editions, or reuse any such Drawings, Specifications, other documents, or copies thereof on extensions of the Project or any other project without written consent of Owner and Engineer and specific written verification or adaptation by Engineer; or

2. have or acquire any title or ownership rights in any other Contract Documents, reuse any such Contract Documents for any purpose without Owner's express written consent, or violate any copyrights pertaining to such Contract Documents.

B. The prohibitions of this Paragraph 3.05 will survive final payment, or termination of the Contract. Nothing herein shall preclude Contractor from retaining copies of the Contract Documents for record purposes.

ARTICLE 4 – COMMENCEMENT AND PROGRESS OF THE WORK

4.01 *Commencement of Contract Times; Notice to Proceed*

A. The Contract Times will commence to run on the thirtieth day after the Effective Date of the Contract or, if a Notice to Proceed is given, on the day indicated in the Notice to Proceed. A Notice to Proceed may be given at any time within 30 days after the Effective Date of the Contract. In no event will the Contract Times commence to run later than the sixtieth day after the day of Bid opening or the thirtieth day after the Effective Date of the Contract, whichever date is earlier.

4.02 *Starting the Work*

A. Contractor shall start to perform the Work on the date when the Contract Times commence to run. No Work shall be done at the Site prior to such date.

4.03 *Reference Points*

A. Owner shall provide engineering surveys to establish reference points for construction which in Engineer's judgment are necessary to enable Contractor to proceed with the Work. Contractor shall be responsible for laying out the Work, shall protect and preserve the established reference points and property monuments, and shall make no changes or relocations without the prior written approval of Owner. Contractor shall report to Engineer whenever any reference point or property monument is lost or destroyed or requires relocation because of necessary changes in grades or locations, and shall be responsible for the accurate replacement or relocation of such reference points or property monuments by professionally qualified personnel.

4.04 *Progress Schedule*

A. Contractor shall adhere to the Progress Schedule established in accordance with Paragraph 2.05 as it may be adjusted from time to time as provided below.

1. Contractor shall submit to Engineer for acceptance (to the extent indicated in Paragraph 2.05) proposed adjustments in the Progress Schedule that will not result in changing the Contract Times.

Copyright © 2013 National Society of Professional Engineers, American Council of Engineering Companies, and American Society of Civil Engineers. All rights reserved.

2. Proposed adjustments in the Progress Schedule that will change the Contract Times shall be submitted in accordance with the requirements of Article 11.

B. Contractor shall carry on the Work and adhere to the Progress Schedule during all disputes or disagreements with Owner. No Work shall be delayed or postponed pending resolution of any disputes or disagreements, or during any appeal process, except as permitted by Paragraph 16.04, or as Owner and Contractor may otherwise agree in writing.

4.05 *Delays in Contractor's Progress*

A. If Owner, Engineer, or anyone for whom Owner is responsible, delays, disrupts, or interferes with the performance or progress of the Work, then Contractor shall be entitled to an equitable adjustment in the Contract Times and Contract Price. Contractor's entitlement to an adjustment of the Contract Times is conditioned on such adjustment being essential to Contractor's ability to complete the Work within the Contract Times.

B. Contractor shall not be entitled to an adjustment in Contract Price or Contract Times for delay, disruption, or interference caused by or within the control of Contractor. Delay, disruption, and interference attributable to and within the control of a Subcontractor or Supplier shall be deemed to be within the control of Contractor.

C. If Contractor's performance or progress is delayed, disrupted, or interfered with by unanticipated causes not the fault of and beyond the control of Owner, Contractor, and those for which they are responsible, then Contractor shall be entitled to an equitable adjustment in Contract Times. Contractor's entitlement to an adjustment of the Contract Times is conditioned on such adjustment being essential to Contractor's ability to complete the Work within the Contract Times. Such an adjustment shall be Contractor's sole and exclusive remedy for the delays, disruption, and interference described in this paragraph. Causes of delay, disruption, or interference that may give rise to an adjustment in Contract Times under this paragraph include but are not limited to the following:

1. severe and unavoidable natural catastrophes such as fires, floods, epidemics, and earthquakes;

2. abnormal weather conditions;

3. acts or failures to act of utility owners (other than those performing other work at or adjacent to the Site by arrangement with the Owner, as contemplated in Article 8); and

4. acts of war or terrorism.

D. Delays, disruption, and interference to the performance or progress of the Work resulting from the existence of a differing subsurface or physical condition, an Underground Facility that was not shown or indicated by the Contract Documents, or not shown or indicated with reasonable accuracy, and those resulting from Hazardous Environmental Conditions, are governed by Article 5.

E. Paragraph 8.03 governs delays, disruption, and interference to the performance or progress of the Work resulting from the performance of certain other work at or adjacent to the Site.

F. Contractor shall not be entitled to an adjustment in Contract Price or Contract Times for any delay, disruption, or interference if such delay is concurrent with a delay, disruption, or interference caused by or within the control of Contractor.

Copyright © 2013 National Society of Professional Engineers, American Council of Engineering Companies, and American Society of Civil Engineers. All rights reserved.

G. Contractor must submit any Change Proposal seeking an adjustment in Contract Price or Contract Times under this paragraph within 30 days of the commencement of the delaying, disrupting, or interfering event.

ARTICLE 5 – AVAILABILITY OF LANDS; SUBSURFACE AND PHYSICAL CONDITIONS; HAZARDOUS ENVIRONMENTAL CONDITIONS

5.01 *Availability of Lands*

A. Owner shall furnish the Site. Owner shall notify Contractor of any encumbrances or restrictions not of general application but specifically related to use of the Site with which Contractor must comply in performing the Work.

B. Upon reasonable written request, Owner shall furnish Contractor with a current statement of record legal title and legal description of the lands upon which permanent improvements are to be made and Owner's interest therein as necessary for giving notice of or filing a mechanic's or construction lien against such lands in accordance with applicable Laws and Regulations.

C. Contractor shall provide for all additional lands and access thereto that may be required for temporary construction facilities or storage of materials and equipment.

5.02 *Use of Site and Other Areas*

A. *Limitation on Use of Site and Other Areas*:

1. Contractor shall confine construction equipment, temporary construction facilities, the storage of materials and equipment, and the operations of workers to the Site, adjacent areas that Contractor has arranged to use through construction easements or otherwise, and other adjacent areas permitted by Laws and Regulations, and shall not unreasonably encumber the Site and such other adjacent areas with construction equipment or other materials or equipment. Contractor shall assume full responsibility for (a) damage to the Site; (b) damage to any such other adjacent areas used for Contractor's operations; (c) damage to any other adjacent land or areas; and (d) for injuries and losses sustained by the owners or occupants of any such land or areas; provided that such damage or injuries result from the performance of the Work or from other actions or conduct of the Contractor or those for which Contractor is responsible.

2. If a damage or injury claim is made by the owner or occupant of any such land or area because of the performance of the Work, or because of other actions or conduct of the Contractor or those for which Contractor is responsible, Contractor shall (a) take immediate corrective or remedial action as required by Paragraph 7.12, or otherwise; (b) promptly attempt to settle the claim as to all parties through negotiations with such owner or occupant, or otherwise resolve the claim by arbitration or other dispute resolution proceeding, or at law; and (c) to the fullest extent permitted by Laws and Regulations, indemnify and hold harmless Owner and Engineer, and the officers, directors, members, partners, employees, agents, consultants and subcontractors of each and any of them from and against any such claim, and against all costs, losses, and damages (including but not limited to all fees and charges of engineers, architects, attorneys, and other professionals and all court or arbitration or other dispute resolution costs) arising out of or relating to any claim or action, legal or equitable, brought by any such owner or occupant against Owner, Engineer, or any other party indemnified hereunder to the extent caused directly or indirectly, in whole or in part

Copyright © 2013 National Society of Professional Engineers, American Council of Engineering Companies, and American Society of Civil Engineers. All rights reserved.

by, or based upon, Contractor's performance of the Work, or because of other actions or conduct of the Contractor or those for which Contractor is responsible.

B. *Removal of Debris During Performance of the Work*: During the progress of the Work the Contractor shall keep the Site and other adjacent areas free from accumulations of waste materials, rubbish, and other debris. Removal and disposal of such waste materials, rubbish, and other debris shall conform to applicable Laws and Regulations.

C. *Cleaning*: Prior to Substantial Completion of the Work Contractor shall clean the Site and the Work and make it ready for utilization by Owner. At the completion of the Work Contractor shall remove from the Site and adjacent areas all tools, appliances, construction equipment and machinery, and surplus materials and shall restore to original condition all property not designated for alteration by the Contract Documents.

D. *Loading of Structures*: Contractor shall not load nor permit any part of any structure to be loaded in any manner that will endanger the structure, nor shall Contractor subject any part of the Work or adjacent structures or land to stresses or pressures that will endanger them.

5.03 *Subsurface and Physical Conditions*

A. *Reports and Drawings*: The Supplementary Conditions identify:

1. those reports known to Owner of explorations and tests of subsurface conditions at or adjacent to the Site;

2. those drawings known to Owner of physical conditions relating to existing surface or subsurface structures at the Site (except Underground Facilities); and

3. Technical Data contained in such reports and drawings.

B. *Reliance by Contractor on Technical Data Authorized*: Contractor may rely upon the accuracy of the Technical Data expressly identified in the Supplementary Conditions with respect to such reports and drawings, but such reports and drawings are not Contract Documents. If no such express identification has been made, then Contractor may rely upon the accuracy of the Technical Data (as defined in Article 1) contained in any geotechnical or environmental report prepared for the Project and made available to Contractor. Except for such reliance on Technical Data, Contractor may not rely upon or make any claim against Owner or Engineer, or any of their officers, directors, members, partners, employees, agents, consultants, or subcontractors, with respect to:

1. the completeness of such reports and drawings for Contractor's purposes, including, but not limited to, any aspects of the means, methods, techniques, sequences, and procedures of construction to be employed by Contractor, and safety precautions and programs incident thereto; or

2. other data, interpretations, opinions, and information contained in such reports or shown or indicated in such drawings; or

3. any Contractor interpretation of or conclusion drawn from any Technical Data or any such other data, interpretations, opinions, or information.

Copyright © 2013 National Society of Professional Engineers, American Council of Engineering Companies, and American Society of Civil Engineers. All rights reserved.

5.04 *Differing Subsurface or Physical Conditions*

A. *Notice by Contractor*: If Contractor believes that any subsurface or physical condition that is uncovered or revealed at the Site either:

1. is of such a nature as to establish that any Technical Data on which Contractor is entitled to rely as provided in Paragraph 5.03 is materially inaccurate; or

2. is of such a nature as to require a change in the Drawings or Specifications; or

3. differs materially from that shown or indicated in the Contract Documents; or

4. is of an unusual nature, and differs materially from conditions ordinarily encountered and generally recognized as inherent in work of the character provided for in the Contract Documents;

then Contractor shall, promptly after becoming aware thereof and before further disturbing the subsurface or physical conditions or performing any Work in connection therewith (except in an emergency as required by Paragraph 7.15), notify Owner and Engineer in writing about such condition. Contractor shall not further disturb such condition or perform any Work in connection therewith (except with respect to an emergency) until receipt of a written statement permitting Contractor to do so.

B. *Engineer's Review*: After receipt of written notice as required by the preceding paragraph, Engineer will promptly review the subsurface or physical condition in question; determine the necessity of Owner's obtaining additional exploration or tests with respect to the condition; conclude whether the condition falls within any one or more of the differing site condition categories in Paragraph 5.04.A above; obtain any pertinent cost or schedule information from Contractor; prepare recommendations to Owner regarding the Contractor's resumption of Work in connection with the subsurface or physical condition in question and the need for any change in the Drawings or Specifications; and advise Owner in writing of Engineer's findings, conclusions, and recommendations.

C. *Owner's Statement to Contractor Regarding Site Condition*: After receipt of Engineer's written findings, conclusions, and recommendations, Owner shall issue a written statement to Contractor (with a copy to Engineer) regarding the subsurface or physical condition in question, addressing the resumption of Work in connection with such condition, indicating whether any change in the Drawings or Specifications will be made, and adopting or rejecting Engineer's written findings, conclusions, and recommendations, in whole or in part.

D. *Possible Price and Times Adjustments*:

1. Contractor shall be entitled to an equitable adjustment in Contract Price or Contract Times, or both, to the extent that the existence of a differing subsurface or physical condition, or any related delay, disruption, or interference, causes an increase or decrease in Contractor's cost of, or time required for, performance of the Work; subject, however, to the following:

a. such condition must fall within any one or more of the categories described in Paragraph 5.04.A;

b. with respect to Work that is paid for on a unit price basis, any adjustment in Contract Price will be subject to the provisions of Paragraph 13.03; and,

Copyright © 2013 National Society of Professional Engineers, American Council of Engineering Companies, and American Society of Civil Engineers. All rights reserved.

c. Contractor's entitlement to an adjustment of the Contract Times is conditioned on such adjustment being essential to Contractor's ability to complete the Work within the Contract Times.

2. Contractor shall not be entitled to any adjustment in the Contract Price or Contract Times with respect to a subsurface or physical condition if:

a. Contractor knew of the existence of such condition at the time Contractor made a commitment to Owner with respect to Contract Price and Contract Times by the submission of a Bid or becoming bound under a negotiated contract, or otherwise; or

b. the existence of such condition reasonably could have been discovered or revealed as a result of any examination, investigation, exploration, test, or study of the Site and contiguous areas expressly required by the Bidding Requirements or Contract Documents to be conducted by or for Contractor prior to Contractor's making such commitment; or

c. Contractor failed to give the written notice as required by Paragraph 5.04.A.

3. If Owner and Contractor agree regarding Contractor's entitlement to and the amount or extent of any adjustment in the Contract Price or Contract Times, or both, then any such adjustment shall be set forth in a Change Order.

4. Contractor may submit a Change Proposal regarding its entitlement to or the amount or extent of any adjustment in the Contract Price or Contract Times, or both, no later than 30 days after Owner's issuance of the Owner's written statement to Contractor regarding the subsurface or physical condition in question.

5.05 *Underground Facilities*

A. *Contractor's Responsibilities*: The information and data shown or indicated in the Contract Documents with respect to existing Underground Facilities at or adjacent to the Site is based on information and data furnished to Owner or Engineer by the owners of such Underground Facilities, including Owner, or by others. Unless it is otherwise expressly provided in the Supplementary Conditions:

1. Owner and Engineer do not warrant or guarantee the accuracy or completeness of any such information or data provided by others; and

2. the cost of all of the following will be included in the Contract Price, and Contractor shall have full responsibility for:

a. reviewing and checking all information and data regarding existing Underground Facilities at the Site;

b. locating all Underground Facilities shown or indicated in the Contract Documents as being at the Site;

c. coordination of the Work with the owners (including Owner) of such Underground Facilities, during construction; and

d. the safety and protection of all existing Underground Facilities at the Site, and repairing any damage thereto resulting from the Work.

B. *Notice by Contractor*: If Contractor believes that an Underground Facility that is uncovered or revealed at the Site was not shown or indicated in the Contract Documents, or was not shown or indicated with reasonable accuracy, then Contractor shall, promptly after

Copyright © 2013 National Society of Professional Engineers, American Council of Engineering Companies, and American Society of Civil Engineers. All rights reserved.

becoming aware thereof and before further disturbing conditions affected thereby or performing any Work in connection therewith (except in an emergency as required by Paragraph 7.15), identify the owner of such Underground Facility and give written notice to that owner and to Owner and Engineer.

C. *Engineer's Review*: Engineer will promptly review the Underground Facility and conclude whether such Underground Facility was not shown or indicated in the Contract Documents, or was not shown or indicated with reasonable accuracy; obtain any pertinent cost or schedule information from Contractor; prepare recommendations to Owner regarding the Contractor's resumption of Work in connection with the Underground Facility in question; determine the extent, if any, to which a change is required in the Drawings or Specifications to reflect and document the consequences of the existence or location of the Underground Facility; and advise Owner in writing of Engineer's findings, conclusions, and recommendations. During such time, Contractor shall be responsible for the safety and protection of such Underground Facility.

D. *Owner's Statement to Contractor Regarding Underground Facility*: After receipt of Engineer's written findings, conclusions, and recommendations, Owner shall issue a written statement to Contractor (with a copy to Engineer) regarding the Underground Facility in question, addressing the resumption of Work in connection with such Underground Facility, indicating whether any change in the Drawings or Specifications will be made, and adopting or rejecting Engineer's written findings, conclusions, and recommendations in whole or in part.

E. *Possible Price and Times Adjustments*:

1. Contractor shall be entitled to an equitable adjustment in the Contract Price or Contract Times, or both, to the extent that any existing Underground Facility at the Site that was not shown or indicated in the Contract Documents, or was not shown or indicated with reasonable accuracy, or any related delay, disruption, or interference, causes an increase or decrease in Contractor's cost of, or time required for, performance of the Work; subject, however, to the following:

    a. Contractor did not know of and could not reasonably have been expected to be aware of or to have anticipated the existence or actual location of the Underground Facility in question;

    b. With respect to Work that is paid for on a unit price basis, any adjustment in Contract Price will be subject to the provisions of Paragraph 13.03;

    c. Contractor's entitlement to an adjustment of the Contract Times is conditioned on such adjustment being essential to Contractor's ability to complete the Work within the Contract Times; and

    d. Contractor gave the notice required in Paragraph 5.05.B.

2. If Owner and Contractor agree regarding Contractor's entitlement to and the amount or extent of any adjustment in the Contract Price or Contract Times, or both, then any such adjustment shall be set forth in a Change Order.

3. Contractor may submit a Change Proposal regarding its entitlement to or the amount or extent of any adjustment in the Contract Price or Contract Times, or both, no later than 30 days after Owner's issuance of the Owner's written statement to Contractor regarding the Underground Facility in question.

Copyright © 2013 National Society of Professional Engineers, American Council of Engineering Companies, and American Society of Civil Engineers. All rights reserved.

5.06 *Hazardous Environmental Conditions at Site*

A. *Reports and Drawings*: The Supplementary Conditions identify:

1. those reports and drawings known to Owner relating to Hazardous Environmental Conditions that have been identified at or adjacent to the Site; and

2. Technical Data contained in such reports and drawings.

B. *Reliance by Contractor on Technical Data Authorized*: Contractor may rely upon the accuracy of the Technical Data expressly identified in the Supplementary Conditions with respect to such reports and drawings, but such reports and drawings are not Contract Documents. If no such express identification has been made, then Contractor may rely on the accuracy of the Technical Data (as defined in Article 1) contained in any geotechnical or environmental report prepared for the Project and made available to Contractor. Except for such reliance on Technical Data, Contractor may not rely upon or make any claim against Owner or Engineer, or any of their officers, directors, members, partners, employees, agents, consultants, or subcontractors with respect to:

1. the completeness of such reports and drawings for Contractor's purposes, including, but not limited to, any aspects of the means, methods, techniques, sequences and procedures of construction to be employed by Contractor and safety precautions and programs incident thereto; or

2. other data, interpretations, opinions and information contained in such reports or shown or indicated in such drawings; or

3. any Contractor interpretation of or conclusion drawn from any Technical Data or any such other data, interpretations, opinions or information.

C. Contractor shall not be responsible for removing or remediating any Hazardous Environmental Condition encountered, uncovered, or revealed at the Site unless such removal or remediation is expressly identified in the Contract Documents to be within the scope of the Work.

D. Contractor shall be responsible for controlling, containing, and duly removing all Constituents of Concern brought to the Site by Contractor, Subcontractors, Suppliers, or anyone else for whom Contractor is responsible, and for any associated costs; and for the costs of removing and remediating any Hazardous Environmental Condition created by the presence of any such Constituents of Concern.

E. If Contractor encounters, uncovers, or reveals a Hazardous Environmental Condition whose removal or remediation is not expressly identified in the Contract Documents as being within the scope of the Work, or if Contractor or anyone for whom Contractor is responsible creates a Hazardous Environmental Condition, then Contractor shall immediately: (1) secure or otherwise isolate such condition; (2) stop all Work in connection with such condition and in any area affected thereby (except in an emergency as required by Paragraph 7.15); and (3) notify Owner and Engineer (and promptly thereafter confirm such notice in writing). Owner shall promptly consult with Engineer concerning the necessity for Owner to retain a qualified expert to evaluate such condition or take corrective action, if any. Promptly after consulting with Engineer, Owner shall take such actions as are necessary to permit Owner to timely obtain required permits and provide Contractor the written notice required by Paragraph 5.06.F. If Contractor or anyone for whom Contractor is responsible created the Hazardous Environmental Condition in question, then Owner may remove and remediate the Hazardous Environmental Condition, and impose a set-off against payments to account for the associated costs.

Copyright © 2013 National Society of Professional Engineers, American Council of Engineering Companies, and American Society of Civil Engineers. All rights reserved.

F. Contractor shall not resume Work in connection with such Hazardous Environmental Condition or in any affected area until after Owner has obtained any required permits related thereto, and delivered written notice to Contractor either (1) specifying that such condition and any affected area is or has been rendered safe for the resumption of Work, or (2) specifying any special conditions under which such Work may be resumed safely.

G. If Owner and Contractor cannot agree as to entitlement to or on the amount or extent, if any, of any adjustment in Contract Price or Contract Times, or both, as a result of such Work stoppage or such special conditions under which Work is agreed to be resumed by Contractor, then within 30 days of Owner's written notice regarding the resumption of Work, Contractor may submit a Change Proposal, or Owner may impose a set-off.

H. If after receipt of such written notice Contractor does not agree to resume such Work based on a reasonable belief it is unsafe, or does not agree to resume such Work under such special conditions, then Owner may order the portion of the Work that is in the area affected by such condition to be deleted from the Work, following the contractual change procedures in Article 11. Owner may have such deleted portion of the Work performed by Owner's own forces or others in accordance with Article 8.

I. To the fullest extent permitted by Laws and Regulations, Owner shall indemnify and hold harmless Contractor, Subcontractors, and Engineer, and the officers, directors, members, partners, employees, agents, consultants, and subcontractors of each and any of them from and against all claims, costs, losses, and damages (including but not limited to all fees and charges of engineers, architects, attorneys, and other professionals and all court or arbitration or other dispute resolution costs) arising out of or relating to a Hazardous Environmental Condition, provided that such Hazardous Environmental Condition (1) was not shown or indicated in the Drawings, Specifications, or other Contract Documents, identified as Technical Data entitled to limited reliance pursuant to Paragraph 5.06.B, or identified in the Contract Documents to be included within the scope of the Work, and (2) was not created by Contractor or by anyone for whom Contractor is responsible. Nothing in this Paragraph 5.06.I shall obligate Owner to indemnify any individual or entity from and against the consequences of that individual's or entity's own negligence.

J. To the fullest extent permitted by Laws and Regulations, Contractor shall indemnify and hold harmless Owner and Engineer, and the officers, directors, members, partners, employees, agents, consultants, and subcontractors of each and any of them from and against all claims, costs, losses, and damages (including but not limited to all fees and charges of engineers, architects, attorneys, and other professionals and all court or arbitration or other dispute resolution costs) arising out of or relating to the failure to control, contain, or remove a Constituent of Concern brought to the Site by Contractor or by anyone for whom Contractor is responsible, or to a Hazardous Environmental Condition created by Contractor or by anyone for whom Contractor is responsible. Nothing in this Paragraph 5.06.J shall obligate Contractor to indemnify any individual or entity from and against the consequences of that individual's or entity's own negligence.

K. The provisions of Paragraphs 5.03, 5.04, and 5.05 do not apply to the presence of Constituents of Concern or to a Hazardous Environmental Condition uncovered or revealed at the Site.

Copyright © 2013 National Society of Professional Engineers, American Council of Engineering Companies, and American Society of Civil Engineers. All rights reserved.

ARTICLE 6 – BONDS AND INSURANCE

6.01 *Performance, Payment, and Other Bonds*

A. Contractor shall furnish a performance bond and a payment bond, each in an amount at least equal to the Contract Price, as security for the faithful performance and payment of all of Contractor's obligations under the Contract. These bonds shall remain in effect until one year after the date when final payment becomes due or until completion of the correction period specified in Paragraph 15.08, whichever is later, except as provided otherwise by Laws or Regulations, the Supplementary Conditions, or other specific provisions of the Contract. Contractor shall also furnish such other bonds as are required by the Supplementary Conditions or other specific provisions of the Contract.

B. All bonds shall be in the form prescribed by the Contract except as provided otherwise by Laws or Regulations, and shall be executed by such sureties as are named in "Companies Holding Certificates of Authority as Acceptable Sureties on Federal Bonds and as Acceptable Reinsuring Companies" as published in Circular 570 (as amended and supplemented) by the Financial Management Service, Surety Bond Branch, U.S. Department of the Treasury. A bond signed by an agent or attorney-in-fact must be accompanied by a certified copy of that individual's authority to bind the surety. The evidence of authority shall show that it is effective on the date the agent or attorney-in-fact signed the accompanying bond.

C. Contractor shall obtain the required bonds from surety companies that are duly licensed or authorized in the jurisdiction in which the Project is located to issue bonds in the required amounts.

D. If the surety on a bond furnished by Contractor is declared bankrupt or becomes insolvent, or its right to do business is terminated in any state or jurisdiction where any part of the Project is located, or the surety ceases to meet the requirements above, then Contractor shall promptly notify Owner and Engineer and shall, within 20 days after the event giving rise to such notification, provide another bond and surety, both of which shall comply with the bond and surety requirements above.

E. If Contractor has failed to obtain a required bond, Owner may exclude the Contractor from the Site and exercise Owner's termination rights under Article 16.

F. Upon request, Owner shall provide a copy of the payment bond to any Subcontractor, Supplier, or other person or entity claiming to have furnished labor or materials used in the performance of the Work.

6.02 *Insurance—General Provisions*

A. Owner and Contractor shall obtain and maintain insurance as required in this Article and in the Supplementary Conditions.

B. All insurance required by the Contract to be purchased and maintained by Owner or Contractor shall be obtained from insurance companies that are duly licensed or authorized, in the state or jurisdiction in which the Project is located, to issue insurance policies for the required limits and coverages. Unless a different standard is indicated in the Supplementary Conditions, all companies that provide insurance policies required under this Contract shall have an A.M. Best rating of A-VII or better.

C. Contractor shall deliver to Owner, with copies to each named insured and additional insured (as identified in this Article, in the Supplementary Conditions, or elsewhere in the Contract), certificates of insurance establishing that Contractor has obtained and is

Copyright © 2013 National Society of Professional Engineers, American Council of Engineering Companies, and American Society of Civil Engineers. All rights reserved.

maintaining the policies, coverages, and endorsements required by the Contract. Upon request by Owner or any other insured, Contractor shall also furnish other evidence of such required insurance, including but not limited to copies of policies and endorsements, and documentation of applicable self-insured retentions and deductibles. Contractor may block out (redact) any confidential premium or pricing information contained in any policy or endorsement furnished under this provision.

D. Owner shall deliver to Contractor, with copies to each named insured and additional insured (as identified in this Article, the Supplementary Conditions, or elsewhere in the Contract), certificates of insurance establishing that Owner has obtained and is maintaining the policies, coverages, and endorsements required of Owner by the Contract (if any). Upon request by Contractor or any other insured, Owner shall also provide other evidence of such required insurance (if any), including but not limited to copies of policies and endorsements, and documentation of applicable self-insured retentions and deductibles. Owner may block out (redact) any confidential premium or pricing information contained in any policy or endorsement furnished under this provision.

E. Failure of Owner or Contractor to demand such certificates or other evidence of the other party's full compliance with these insurance requirements, or failure of Owner or Contractor to identify a deficiency in compliance from the evidence provided, shall not be construed as a waiver of the other party's obligation to obtain and maintain such insurance.

F. If either party does not purchase or maintain all of the insurance required of such party by the Contract, such party shall notify the other party in writing of such failure to purchase prior to the start of the Work, or of such failure to maintain prior to any change in the required coverage.

G. If Contractor has failed to obtain and maintain required insurance, Owner may exclude the Contractor from the Site, impose an appropriate set-off against payment, and exercise Owner's termination rights under Article 16.

H. Without prejudice to any other right or remedy, if a party has failed to obtain required insurance, the other party may elect to obtain equivalent insurance to protect such other party's interests at the expense of the party who was required to provide such coverage, and the Contract Price shall be adjusted accordingly.

I. Owner does not represent that insurance coverage and limits established in this Contract necessarily will be adequate to protect Contractor or Contractor's interests.

J. The insurance and insurance limits required herein shall not be deemed as a limitation on Contractor's liability under the indemnities granted to Owner and other individuals and entities in the Contract.

6.03 *Contractor's Insurance*

A. *Workers' Compensation*: Contractor shall purchase and maintain workers' compensation and employer's liability insurance for:

1. claims under workers' compensation, disability benefits, and other similar employee benefit acts.

2. United States Longshoreman and Harbor Workers' Compensation Act and Jones Act coverage (if applicable).

3. claims for damages because of bodily injury, occupational sickness or disease, or death of Contractor's employees (by stop-gap endorsement in monopolist worker's compensation states).

Copyright © 2013 National Society of Professional Engineers, American Council of Engineering Companies, and American Society of Civil Engineers. All rights reserved.

4. Foreign voluntary worker compensation (if applicable).

B. *Commercial General Liability—Claims Covered*: Contractor shall purchase and maintain commercial general liability insurance, covering all operations by or on behalf of Contractor, on an occurrence basis, against:

1. claims for damages because of bodily injury, sickness or disease, or death of any person other than Contractor's employees.

2. claims for damages insured by reasonably available personal injury liability coverage.

3. claims for damages, other than to the Work itself, because of injury to or destruction of tangible property wherever located, including loss of use resulting therefrom.

C. *Commercial General Liability—Form and Content*: Contractor's commercial liability policy shall be written on a 1996 (or later) ISO commercial general liability form (occurrence form) and include the following coverages and endorsements:

1. Products and completed operations coverage:

   a. Such insurance shall be maintained for three years after final payment.

   b. Contractor shall furnish Owner and each other additional insured (as identified in the Supplementary Conditions or elsewhere in the Contract) evidence of continuation of such insurance at final payment and three years thereafter.

2. Blanket contractual liability coverage, to the extent permitted by law, including but not limited to coverage of Contractor's contractual indemnity obligations in Paragraph 7.18.

3. Broad form property damage coverage.

4. Severability of interest.

5. Underground, explosion, and collapse coverage.

6. Personal injury coverage.

7. Additional insured endorsements that include both ongoing operations and products and completed operations coverage through ISO Endorsements CG 20 10 10 01 and CG 20 37 10 01 (together); or CG 20 10 07 04 and CG 20 37 07 04 (together); or their equivalent.

8. For design professional additional insureds, ISO Endorsement CG 20 32 07 04, "Additional Insured—Engineers, Architects or Surveyors Not Engaged by the Named Insured" or its equivalent.

D. *Automobile liability*: Contractor shall purchase and maintain automobile liability insurance against claims for damages because of bodily injury or death of any person or property damage arising out of the ownership, maintenance, or use of any motor vehicle. The automobile liability policy shall be written on an occurrence basis.

E. *Umbrella or excess liability*: Contractor shall purchase and maintain umbrella or excess liability insurance written over the underlying employer's liability, commercial general liability, and automobile liability insurance described in the paragraphs above. Subject to industry-standard exclusions, the coverage afforded shall follow form as to each and every one of the underlying policies.

F. *Contractor's pollution liability insurance*: Contractor shall purchase and maintain a policy covering third-party injury and property damage claims, including clean-up costs, as a result

Copyright © 2013 National Society of Professional Engineers, American Council of Engineering Companies, and American Society of Civil Engineers. All rights reserved.

of pollution conditions arising from Contractor's operations and completed operations. This insurance shall be maintained for no less than three years after final completion.

G. *Additional insureds*: The Contractor's commercial general liability, automobile liability, umbrella or excess, and pollution liability policies shall include and list as additional insureds Owner and Engineer, and any individuals or entities identified in the Supplementary Conditions; include coverage for the respective officers, directors, members, partners, employees, agents, consultants, and subcontractors of each and any of all such additional insureds; and the insurance afforded to these additional insureds shall provide primary coverage for all claims covered thereby (including as applicable those arising from both ongoing and completed operations) on a non-contributory basis. Contractor shall obtain all necessary endorsements to support these requirements.

H. *Contractor's professional liability insurance*: If Contractor will provide or furnish professional services under this Contract, through a delegation of professional design services or otherwise, then Contractor shall be responsible for purchasing and maintaining applicable professional liability insurance. This insurance shall provide protection against claims arising out of performance of professional design or related services, and caused by a negligent error, omission, or act for which the insured party is legally liable. It shall be maintained throughout the duration of the Contract and for a minimum of two years after Substantial Completion. If such professional design services are performed by a Subcontractor, and not by Contractor itself, then the requirements of this paragraph may be satisfied through the purchasing and maintenance of such insurance by such Subcontractor.

I. *General provisions*: The policies of insurance required by this Paragraph 6.03 shall:

1. include at least the specific coverages provided in this Article.
2. be written for not less than the limits of liability provided in this Article and in the Supplementary Conditions, or required by Laws or Regulations, whichever is greater.
3. contain a provision or endorsement that the coverage afforded will not be canceled, materially changed, or renewal refused until at least 10 days prior written notice has been given to Contractor. Within three days of receipt of any such written notice, Contractor shall provide a copy of the notice to Owner, Engineer, and each other insured under the policy.
4. remain in effect at least until final payment (and longer if expressly required in this Article) and at all times thereafter when Contractor may be correcting, removing, or replacing defective Work as a warranty or correction obligation, or otherwise, or returning to the Site to conduct other tasks arising from the Contract Documents.
5. be appropriate for the Work being performed and provide protection from claims that may arise out of or result from Contractor's performance of the Work and Contractor's other obligations under the Contract Documents, whether it is to be performed by Contractor, any Subcontractor or Supplier, or by anyone directly or indirectly employed by any of them to perform any of the Work, or by anyone for whose acts any of them may be liable.

J. The coverage requirements for specific policies of insurance must be met by such policies, and not by reference to excess or umbrella insurance provided in other policies.

Copyright © 2013 National Society of Professional Engineers, American Council of Engineering Companies, and American Society of Civil Engineers. All rights reserved.

6.04 *Owner's Liability Insurance*

A. In addition to the insurance required to be provided by Contractor under Paragraph 6.03, Owner, at Owner's option, may purchase and maintain at Owner's expense Owner's own liability insurance as will protect Owner against claims which may arise from operations under the Contract Documents.

B. Owner's liability policies, if any, operate separately and independently from policies required to be provided by Contractor, and Contractor cannot rely upon Owner's liability policies for any of Contractor's obligations to the Owner, Engineer, or third parties.

6.05 *Property Insurance*

A. *Builder's Risk*: Unless otherwise provided in the Supplementary Conditions, Contractor shall purchase and maintain builder's risk insurance upon the Work on a completed value basis, in the amount of the full insurable replacement cost thereof (subject to such deductible amounts as may be provided in the Supplementary Conditions or required by Laws and Regulations). This insurance shall:

1. include the Owner and Contractor as named insureds, and all Subcontractors, and any individuals or entities required by the Supplementary Conditions to be insured under such builder's risk policy, as insureds or named insureds. For purposes of the remainder of this Paragraph 6.05, Paragraphs 6.06 and 6.07, and any corresponding Supplementary Conditions, the parties required to be insured shall collectively be referred to as "insureds."

2. be written on a builder's risk "all risk" policy form that shall at least include insurance for physical loss or damage to the Work, temporary buildings, falsework, and materials and equipment in transit, and shall insure against at least the following perils or causes of loss: fire; lightning; windstorm; riot; civil commotion; terrorism; vehicle impact; aircraft; smoke; theft; vandalism and malicious mischief; mechanical breakdown, boiler explosion, and artificially generated electric current; earthquake; volcanic activity, and other earth movement; flood; collapse; explosion; debris removal; demolition occasioned by enforcement of Laws and Regulations; water damage (other than that caused by flood); and such other perils or causes of loss as may be specifically required by the Supplementary Conditions. If insurance against mechanical breakdown, boiler explosion, and artificially generated electric current; earthquake; volcanic activity, and other earth movement; or flood, are not commercially available under builder's risk policies, by endorsement or otherwise, such insurance may be provided through other insurance policies acceptable to Owner and Contractor.

3. cover, as insured property, at least the following: (a) the Work and all materials, supplies, machinery, apparatus, equipment, fixtures, and other property of a similar nature that are to be incorporated into or used in the preparation, fabrication, construction, erection, or completion of the Work, including Owner-furnished or assigned property; (b) spare parts inventory required within the scope of the Contract; and (c) temporary works which are not intended to form part of the permanent constructed Work but which are intended to provide working access to the Site, or to the Work under construction, or which are intended to provide temporary support for the Work under construction, including scaffolding, form work, fences, shoring, falsework, and temporary structures.

4. cover expenses incurred in the repair or replacement of any insured property (including but not limited to fees and charges of engineers and architects).

Copyright © 2013 National Society of Professional Engineers, American Council of Engineering Companies, and American Society of Civil Engineers. All rights reserved.

5. extend to cover damage or loss to insured property while in temporary storage at the Site or in a storage location outside the Site (but not including property stored at the premises of a manufacturer or Supplier).
6. extend to cover damage or loss to insured property while in transit.
7. allow for partial occupation or use of the Work by Owner, such that those portions of the Work that are not yet occupied or used by Owner shall remain covered by the builder's risk insurance.
8. allow for the waiver of the insurer's subrogation rights, as set forth below.
9. provide primary coverage for all losses and damages caused by the perils or causes of loss covered.
10. not include a co-insurance clause.
11. include an exception for ensuing losses from physical damage or loss with respect to any defective workmanship, design, or materials exclusions.
12. include performance/hot testing and start-up.
13. be maintained in effect, subject to the provisions herein regarding Substantial Completion and partial occupancy or use of the Work by Owner, until the Work is complete.

B. *Notice of Cancellation or Change*: All the policies of insurance (and the certificates or other evidence thereof) required to be purchased and maintained in accordance with this Paragraph 6.05 will contain a provision or endorsement that the coverage afforded will not be canceled or materially changed or renewal refused until at least 10 days prior written notice has been given to the purchasing policyholder. Within three days of receipt of any such written notice, the purchasing policyholder shall provide a copy of the notice to each other insured.

C. *Deductibles*: The purchaser of any required builder's risk or property insurance shall pay for costs not covered because of the application of a policy deductible.

D. *Partial Occupancy or Use by Owner*: If Owner will occupy or use a portion or portions of the Work prior to Substantial Completion of all the Work as provided in Paragraph 15.04, then Owner (directly, if it is the purchaser of the builder's risk policy, or through Contractor) will provide notice of such occupancy or use to the builder's risk insurer. The builder's risk insurance shall not be canceled or permitted to lapse on account of any such partial use or occupancy; rather, those portions of the Work that are occupied or used by Owner may come off the builder's risk policy, while those portions of the Work not yet occupied or used by Owner shall remain covered by the builder's risk insurance.

E. *Additional Insurance*: If Contractor elects to obtain other special insurance to be included in or supplement the builder's risk or property insurance policies provided under this Paragraph 6.05, it may do so at Contractor's expense.

F. *Insurance of Other Property*: If the express insurance provisions of the Contract do not require or address the insurance of a property item or interest, such as tools, construction equipment, or other personal property owned by Contractor, a Subcontractor, or an employee of Contractor or a Subcontractor, then the entity or individual owning such property item will be responsible for deciding whether to insure it, and if so in what amount.

Copyright © 2013 National Society of Professional Engineers, American Council of Engineering Companies, and American Society of Civil Engineers. All rights reserved.

6.06 *Waiver of Rights*

A. All policies purchased in accordance with Paragraph 6.05, expressly including the builder's risk policy, shall contain provisions to the effect that in the event of payment of any loss or damage the insurers will have no rights of recovery against any insureds thereunder, or against Engineer or its consultants, or their officers, directors, members, partners, employees, agents, consultants, or subcontractors. Owner and Contractor waive all rights against each other and the respective officers, directors, members, partners, employees, agents, consultants, and subcontractors of each and any of them, for all losses and damages caused by, arising out of, or resulting from any of the perils or causes of loss covered by such policies and any other property insurance applicable to the Work; and, in addition, waive all such rights against Engineer, its consultants, all Subcontractors, all individuals or entities identified in the Supplementary Conditions as insureds, and the officers, directors, members, partners, employees, agents, consultants, and subcontractors of each and any of them, under such policies for losses and damages so caused. None of the above waivers shall extend to the rights that any party making such waiver may have to the proceeds of insurance held by Owner or Contractor as trustee or fiduciary, or otherwise payable under any policy so issued.

B. Owner waives all rights against Contractor, Subcontractors, and Engineer, and the officers, directors, members, partners, employees, agents, consultants and subcontractors of each and any of them, for:

1. loss due to business interruption, loss of use, or other consequential loss extending beyond direct physical loss or damage to Owner's property or the Work caused by, arising out of, or resulting from fire or other perils whether or not insured by Owner; and

2. loss or damage to the completed Project or part thereof caused by, arising out of, or resulting from fire or other insured peril or cause of loss covered by any property insurance maintained on the completed Project or part thereof by Owner during partial occupancy or use pursuant to Paragraph 15.04, after Substantial Completion pursuant to Paragraph 15.03, or after final payment pursuant to Paragraph 15.06.

C. Any insurance policy maintained by Owner covering any loss, damage or consequential loss referred to in Paragraph 6.06.B shall contain provisions to the effect that in the event of payment of any such loss, damage, or consequential loss, the insurers will have no rights of recovery against Contractor, Subcontractors, or Engineer, or the officers, directors, members, partners, employees, agents, consultants, or subcontractors of each and any of them.

D. Contractor shall be responsible for assuring that the agreement under which a Subcontractor performs a portion of the Work contains provisions whereby the Subcontractor waives all rights against Owner, Contractor, all individuals or entities identified in the Supplementary Conditions as insureds, the Engineer and its consultants, and the officers, directors, members, partners, employees, agents, consultants, and subcontractors of each and any of them, for all losses and damages caused by, arising out of, relating to, or resulting from any of the perils or causes of loss covered by builder's risk insurance and any other property insurance applicable to the Work.

6.07 *Receipt and Application of Property Insurance Proceeds*

A. Any insured loss under the builder's risk and other policies of insurance required by Paragraph 6.05 will be adjusted and settled with the named insured that purchased the

Copyright © 2013 National Society of Professional Engineers, American Council of Engineering Companies, and American Society of Civil Engineers. All rights reserved.

policy. Such named insured shall act as fiduciary for the other insureds, and give notice to such other insureds that adjustment and settlement of a claim is in progress. Any other insured may state its position regarding a claim for insured loss in writing within 15 days after notice of such claim.

B. Proceeds for such insured losses may be made payable by the insurer either jointly to multiple insureds, or to the named insured that purchased the policy in its own right and as fiduciary for other insureds, subject to the requirements of any applicable mortgage clause. A named insured receiving insurance proceeds under the builder's risk and other policies of insurance required by Paragraph 6.05 shall distribute such proceeds in accordance with such agreement as the parties in interest may reach, or as otherwise required under the dispute resolution provisions of this Contract or applicable Laws and Regulations.

C. If no other special agreement is reached, the damaged Work shall be repaired or replaced, the money so received applied on account thereof, and the Work and the cost thereof covered by Change Order, if needed.

ARTICLE 7 – CONTRACTOR'S RESPONSIBILITIES

7.01 *Supervision and Superintendence*

A. Contractor shall supervise, inspect, and direct the Work competently and efficiently, devoting such attention thereto and applying such skills and expertise as may be necessary to perform the Work in accordance with the Contract Documents. Contractor shall be solely responsible for the means, methods, techniques, sequences, and procedures of construction.

B. At all times during the progress of the Work, Contractor shall assign a competent resident superintendent who shall not be replaced without written notice to Owner and Engineer except under extraordinary circumstances.

7.02 *Labor; Working Hours*

A. Contractor shall provide competent, suitably qualified personnel to survey and lay out the Work and perform construction as required by the Contract Documents. Contractor shall at all times maintain good discipline and order at the Site.

B. Except as otherwise required for the safety or protection of persons or the Work or property at the Site or adjacent thereto, and except as otherwise stated in the Contract Documents, all Work at the Site shall be performed during regular working hours, Monday through Friday. Contractor will not perform Work on a Saturday, Sunday, or any legal holiday. Contractor may perform Work outside regular working hours or on Saturdays, Sundays, or legal holidays only with Owner's written consent, which will not be unreasonably withheld.

7.03 *Services, Materials, and Equipment*

A. Unless otherwise specified in the Contract Documents, Contractor shall provide and assume full responsibility for all services, materials, equipment, labor, transportation, construction equipment and machinery, tools, appliances, fuel, power, light, heat, telephone, water, sanitary facilities, temporary facilities, and all other facilities and incidentals necessary for the performance, testing, start up, and completion of the Work, whether or not such items are specifically called for in the Contract Documents.

B. All materials and equipment incorporated into the Work shall be of good quality and new, except as otherwise provided in the Contract Documents. All special warranties and

Copyright © 2013 National Society of Professional Engineers, American Council of Engineering Companies, and American Society of Civil Engineers. All rights reserved.

guarantees required by the Specifications shall expressly run to the benefit of Owner. If required by Engineer, Contractor shall furnish satisfactory evidence (including reports of required tests) as to the source, kind, and quality of materials and equipment.

C. All materials and equipment shall be stored, applied, installed, connected, erected, protected, used, cleaned, and conditioned in accordance with instructions of the applicable Supplier, except as otherwise may be provided in the Contract Documents.

7.04 *"Or Equals"*

A. Whenever an item of material or equipment is specified or described in the Contract Documents by using the name of a proprietary item or the name of a particular Supplier, the Contract Price has been based upon Contractor furnishing such item as specified. The specification or description of such an item is intended to establish the type, function, appearance, and quality required. Unless the specification or description contains or is followed by words reading that no like, equivalent, or "or equal" item is permitted, Contractor may request that Engineer authorize the use of other items of material or equipment, or items from other proposed suppliers under the circumstances described below.

1. If Engineer in its sole discretion determines that an item of material or equipment proposed by Contractor is functionally equal to that named and sufficiently similar so that no change in related Work will be required, Engineer shall deem it an "or equal" item. For the purposes of this paragraph, a proposed item of material or equipment will be considered functionally equal to an item so named if:

a. in the exercise of reasonable judgment Engineer determines that:

1) it is at least equal in materials of construction, quality, durability, appearance, strength, and design characteristics;

2) it will reliably perform at least equally well the function and achieve the results imposed by the design concept of the completed Project as a functioning whole;

3) it has a proven record of performance and availability of responsive service; and

4) it is not objectionable to Owner.

b. Contractor certifies that, if approved and incorporated into the Work:

1) there will be no increase in cost to the Owner or increase in Contract Times; and

2) it will conform substantially to the detailed requirements of the item named in the Contract Documents.

B. *Contractor's Expense*: Contractor shall provide all data in support of any proposed "or equal" item at Contractor's expense.

C. *Engineer's Evaluation and Determination*: Engineer will be allowed a reasonable time to evaluate each "or-equal" request. Engineer may require Contractor to furnish additional data about the proposed "or-equal" item. Engineer will be the sole judge of acceptability. No "or-equal" item will be ordered, furnished, installed, or utilized until Engineer's review is complete and Engineer determines that the proposed item is an "or-equal", which will be evidenced by an approved Shop Drawing or other written communication. Engineer will advise Contractor in writing of any negative determination.

Copyright © 2013 National Society of Professional Engineers, American Council of Engineering Companies, and American Society of Civil Engineers. All rights reserved.

D. *Effect of Engineer's Determination*: Neither approval nor denial of an "or-equal" request shall result in any change in Contract Price. The Engineer's denial of an "or-equal" request shall be final and binding, and may not be reversed through an appeal under any provision of the Contract Documents.

E. *Treatment as a Substitution Request*: If Engineer determines that an item of material or equipment proposed by Contractor does not qualify as an "or-equal" item, Contractor may request that Engineer considered the proposed item as a substitute pursuant to Paragraph 7.05.

7.05 *Substitutes*

A. Unless the specification or description of an item of material or equipment required to be furnished under the Contract Documents contains or is followed by words reading that no substitution is permitted, Contractor may request that Engineer authorize the use of other items of material or equipment under the circumstances described below. To the extent possible such requests shall be made before commencement of related construction at the Site.

1. Contractor shall submit sufficient information as provided below to allow Engineer to determine if the item of material or equipment proposed is functionally equivalent to that named and an acceptable substitute therefor. Engineer will not accept requests for review of proposed substitute items of material or equipment from anyone other than Contractor.

2. The requirements for review by Engineer will be as set forth in Paragraph 7.05.B, as supplemented by the Specifications, and as Engineer may decide is appropriate under the circumstances.

3. Contractor shall make written application to Engineer for review of a proposed substitute item of material or equipment that Contractor seeks to furnish or use. The application:

a. shall certify that the proposed substitute item will:

1) perform adequately the functions and achieve the results called for by the general design,

2) be similar in substance to that specified, and

3) be suited to the same use as that specified.

b. will state:

1) the extent, if any, to which the use of the proposed substitute item will necessitate a change in Contract Times,

2) whether use of the proposed substitute item in the Work will require a change in any of the Contract Documents (or in the provisions of any other direct contract with Owner for other work on the Project) to adapt the design to the proposed substitute item, and

3) whether incorporation or use of the proposed substitute item in connection with the Work is subject to payment of any license fee or royalty.

c. will identify:

1) all variations of the proposed substitute item from that specified, and

Copyright © 2013 National Society of Professional Engineers, American Council of Engineering Companies, and American Society of Civil Engineers. All rights reserved.

2) available engineering, sales, maintenance, repair, and replacement services.

d. shall contain an itemized estimate of all costs or credits that will result directly or indirectly from use of such substitute item, including but not limited to changes in Contract Price, shared savings, costs of redesign, and claims of other contractors affected by any resulting change.

B. *Engineer's Evaluation and Determination*: Engineer will be allowed a reasonable time to evaluate each substitute request, and to obtain comments and direction from Owner. Engineer may require Contractor to furnish additional data about the proposed substitute item. Engineer will be the sole judge of acceptability. No substitute will be ordered, furnished, installed, or utilized until Engineer's review is complete and Engineer determines that the proposed item is an acceptable substitute. Engineer's determination will be evidenced by a Field Order or a proposed Change Order accounting for the substitution itself and all related impacts, including changes in Contract Price or Contract Times. Engineer will advise Contractor in writing of any negative determination.

C. *Special Guarantee*: Owner may require Contractor to furnish at Contractor's expense a special performance guarantee or other surety with respect to any substitute.

D. *Reimbursement of Engineer's Cost*: Engineer will record Engineer's costs in evaluating a substitute proposed or submitted by Contractor. Whether or not Engineer approves a substitute so proposed or submitted by Contractor, Contractor shall reimburse Owner for the reasonable charges of Engineer for evaluating each such proposed substitute. Contractor shall also reimburse Owner for the reasonable charges of Engineer for making changes in the Contract Documents (or in the provisions of any other direct contract with Owner) resulting from the acceptance of each proposed substitute.

E. *Contractor's Expense*: Contractor shall provide all data in support of any proposed substitute at Contractor's expense.

F. *Effect of Engineer's Determination*: If Engineer approves the substitution request, Contractor shall execute the proposed Change Order and proceed with the substitution. The Engineer's denial of a substitution request shall be final and binding, and may not be reversed through an appeal under any provision of the Contract Documents. Contractor may challenge the scope of reimbursement costs imposed under Paragraph 7.05.D, by timely submittal of a Change Proposal.

7.06 *Concerning Subcontractors, Suppliers, and Others*

A. Contractor may retain Subcontractors and Suppliers for the performance of parts of the Work. Such Subcontractors and Suppliers must be acceptable to Owner.

B. Contractor shall retain specific Subcontractors, Suppliers, or other individuals or entities for the performance of designated parts of the Work if required by the Contract to do so.

C. Subsequent to the submittal of Contractor's Bid or final negotiation of the terms of the Contract, Owner may not require Contractor to retain any Subcontractor, Supplier, or other individual or entity to furnish or perform any of the Work against which Contractor has reasonable objection.

D. Prior to entry into any binding subcontract or purchase order, Contractor shall submit to Owner the identity of the proposed Subcontractor or Supplier (unless Owner has already deemed such proposed Subcontractor or Supplier acceptable, during the bidding process or otherwise). Such proposed Subcontractor or Supplier shall be deemed acceptable to Owner unless Owner raises a substantive, reasonable objection within five days.

Copyright © 2013 National Society of Professional Engineers, American Council of Engineering Companies, and American Society of Civil Engineers. All rights reserved.

E. Owner may require the replacement of any Subcontractor, Supplier, or other individual or entity retained by Contractor to perform any part of the Work. Owner also may require Contractor to retain specific replacements; provided, however, that Owner may not require a replacement to which Contractor has a reasonable objection. If Contractor has submitted the identity of certain Subcontractors, Suppliers, or other individuals or entities for acceptance by Owner, and Owner has accepted it (either in writing or by failing to make written objection thereto), then Owner may subsequently revoke the acceptance of any such Subcontractor, Supplier, or other individual or entity so identified solely on the basis of substantive, reasonable objection after due investigation. Contractor shall submit an acceptable replacement for the rejected Subcontractor, Supplier, or other individual or entity.

F. If Owner requires the replacement of any Subcontractor, Supplier, or other individual or entity retained by Contractor to perform any part of the Work, then Contractor shall be entitled to an adjustment in Contract Price or Contract Times, or both, with respect to the replacement; and Contractor shall initiate a Change Proposal for such adjustment within 30 days of Owner's requirement of replacement.

G. No acceptance by Owner of any such Subcontractor, Supplier, or other individual or entity, whether initially or as a replacement, shall constitute a waiver of the right of Owner to the completion of the Work in accordance with the Contract Documents.

H. On a monthly basis Contractor shall submit to Engineer a complete list of all Subcontractors and Suppliers having a direct contract with Contractor, and of all other Subcontractors and Suppliers known to Contractor at the time of submittal.

I. Contractor shall be fully responsible to Owner and Engineer for all acts and omissions of the Subcontractors, Suppliers, and other individuals or entities performing or furnishing any of the Work just as Contractor is responsible for Contractor's own acts and omissions.

J. Contractor shall be solely responsible for scheduling and coordinating the work of Subcontractors, Suppliers, and all other individuals or entities performing or furnishing any of the Work.

K. Contractor shall restrict all Subcontractors, Suppliers, and such other individuals or entities performing or furnishing any of the Work from communicating with Engineer or Owner, except through Contractor or in case of an emergency, or as otherwise expressly allowed herein.

L. The divisions and sections of the Specifications and the identifications of any Drawings shall not control Contractor in dividing the Work among Subcontractors or Suppliers or delineating the Work to be performed by any specific trade.

M. All Work performed for Contractor by a Subcontractor or Supplier shall be pursuant to an appropriate contractual agreement that specifically binds the Subcontractor or Supplier to the applicable terms and conditions of the Contract Documents for the benefit of Owner and Engineer.

N. Owner may furnish to any Subcontractor or Supplier, to the extent practicable, information about amounts paid to Contractor on account of Work performed for Contractor by the particular Subcontractor or Supplier.

Copyright © 2013 National Society of Professional Engineers, American Council of Engineering Companies, and American Society of Civil Engineers. All rights reserved.

O. Nothing in the Contract Documents:

1. shall create for the benefit of any such Subcontractor, Supplier, or other individual or entity any contractual relationship between Owner or Engineer and any such Subcontractor, Supplier, or other individual or entity; nor

2. shall create any obligation on the part of Owner or Engineer to pay or to see to the payment of any money due any such Subcontractor, Supplier, or other individual or entity except as may otherwise be required by Laws and Regulations.

7.07 *Patent Fees and Royalties*

A. Contractor shall pay all license fees and royalties and assume all costs incident to the use in the performance of the Work or the incorporation in the Work of any invention, design, process, product, or device which is the subject of patent rights or copyrights held by others. If a particular invention, design, process, product, or device is specified in the Contract Documents for use in the performance of the Work and if, to the actual knowledge of Owner or Engineer, its use is subject to patent rights or copyrights calling for the payment of any license fee or royalty to others, the existence of such rights shall be disclosed by Owner in the Contract Documents.

B. To the fullest extent permitted by Laws and Regulations, Owner shall indemnify and hold harmless Contractor, and its officers, directors, members, partners, employees, agents, consultants, and subcontractors from and against all claims, costs, losses, and damages (including but not limited to all fees and charges of engineers, architects, attorneys, and other professionals, and all court or arbitration or other dispute resolution costs) arising out of or relating to any infringement of patent rights or copyrights incident to the use in the performance of the Work or resulting from the incorporation in the Work of any invention, design, process, product, or device specified in the Contract Documents, but not identified as being subject to payment of any license fee or royalty to others required by patent rights or copyrights.

C. To the fullest extent permitted by Laws and Regulations, Contractor shall indemnify and hold harmless Owner and Engineer, and the officers, directors, members, partners, employees, agents, consultants and subcontractors of each and any of them from and against all claims, costs, losses, and damages (including but not limited to all fees and charges of engineers, architects, attorneys, and other professionals and all court or arbitration or other dispute resolution costs) arising out of or relating to any infringement of patent rights or copyrights incident to the use in the performance of the Work or resulting from the incorporation in the Work of any invention, design, process, product, or device not specified in the Contract Documents.

7.08 *Permits*

A. Unless otherwise provided in the Contract Documents, Contractor shall obtain and pay for all construction permits and licenses. Owner shall assist Contractor, when necessary, in obtaining such permits and licenses. Contractor shall pay all governmental charges and inspection fees necessary for the prosecution of the Work which are applicable at the time of the submission of Contractor's Bid (or when Contractor became bound under a negotiated contract). Owner shall pay all charges of utility owners for connections for providing permanent service to the Work

Copyright © 2013 National Society of Professional Engineers, American Council of Engineering Companies, and American Society of Civil Engineers. All rights reserved.

7.09 *Taxes*

A. Contractor shall pay all sales, consumer, use, and other similar taxes required to be paid by Contractor in accordance with the Laws and Regulations of the place of the Project which are applicable during the performance of the Work.

7.10 *Laws and Regulations*

A. Contractor shall give all notices required by and shall comply with all Laws and Regulations applicable to the performance of the Work. Except where otherwise expressly required by applicable Laws and Regulations, neither Owner nor Engineer shall be responsible for monitoring Contractor's compliance with any Laws or Regulations.

B. If Contractor performs any Work or takes any other action knowing or having reason to know that it is contrary to Laws or Regulations, Contractor shall bear all resulting costs and losses, and shall indemnify and hold harmless Owner and Engineer, and the officers, directors, members, partners, employees, agents, consultants, and subcontractors of each and any of them from and against all claims, costs, losses, and damages (including but not limited to all fees and charges of engineers, architects, attorneys, and other professionals and all court or arbitration or other dispute resolution costs) arising out of or relating to such Work or other action. It shall not be Contractor's responsibility to make certain that the Work described in the Contract Documents is in accordance with Laws and Regulations, but this shall not relieve Contractor of Contractor's obligations under Paragraph 3.03.

C. Owner or Contractor may give notice to the other party of any changes after the submission of Contractor's Bid (or after the date when Contractor became bound under a negotiated contract) in Laws or Regulations having an effect on the cost or time of performance of the Work, including but not limited to changes in Laws or Regulations having an effect on procuring permits and on sales, use, value-added, consumption, and other similar taxes. If Owner and Contractor are unable to agree on entitlement to or on the amount or extent, if any, of any adjustment in Contract Price or Contract Times resulting from such changes, then within 30 days of such notice Contractor may submit a Change Proposal, or Owner may initiate a Claim.

7.11 *Record Documents*

A. Contractor shall maintain in a safe place at the Site one printed record copy of all Drawings, Specifications, Addenda, Change Orders, Work Change Directives, Field Orders, written interpretations and clarifications, and approved Shop Drawings. Contractor shall keep such record documents in good order and annotate them to show changes made during construction. These record documents, together with all approved Samples, will be available to Engineer for reference. Upon completion of the Work, Contractor shall deliver these record documents to Engineer.

7.12 *Safety and Protection*

A. Contractor shall be solely responsible for initiating, maintaining, and supervising all safety precautions and programs in connection with the Work. Such responsibility does not relieve Subcontractors of their responsibility for the safety of persons or property in the performance of their work, nor for compliance with applicable safety Laws and Regulations. Contractor shall take all necessary precautions for the safety of, and shall provide the necessary protection to prevent damage, injury, or loss to:

1. all persons on the Site or who may be affected by the Work;

Copyright © 2013 National Society of Professional Engineers, American Council of Engineering Companies, and American Society of Civil Engineers. All rights reserved.

2. all the Work and materials and equipment to be incorporated therein, whether in storage on or off the Site; and

3. other property at the Site or adjacent thereto, including trees, shrubs, lawns, walks, pavements, roadways, structures, other work in progress, utilities, and Underground Facilities not designated for removal, relocation, or replacement in the course of construction.

B. Contractor shall comply with all applicable Laws and Regulations relating to the safety of persons or property, or to the protection of persons or property from damage, injury, or loss; and shall erect and maintain all necessary safeguards for such safety and protection. Contractor shall notify Owner; the owners of adjacent property, Underground Facilities, and other utilities; and other contractors and utility owners performing work at or adjacent to the Site, when prosecution of the Work may affect them, and shall cooperate with them in the protection, removal, relocation, and replacement of their property or work in progress.

C. Contractor shall comply with the applicable requirements of Owner's safety programs, if any. The Supplementary Conditions identify any Owner's safety programs that are applicable to the Work.

D. Contractor shall inform Owner and Engineer of the specific requirements of Contractor's safety program with which Owner's and Engineer's employees and representatives must comply while at the Site.

E. All damage, injury, or loss to any property referred to in Paragraph 7.12.A.2 or 7.12.A.3 caused, directly or indirectly, in whole or in part, by Contractor, any Subcontractor, Supplier, or any other individual or entity directly or indirectly employed by any of them to perform any of the Work, or anyone for whose acts any of them may be liable, shall be remedied by Contractor at its expense (except damage or loss attributable to the fault of Drawings or Specifications or to the acts or omissions of Owner or Engineer or anyone employed by any of them, or anyone for whose acts any of them may be liable, and not attributable, directly or indirectly, in whole or in part, to the fault or negligence of Contractor or any Subcontractor, Supplier, or other individual or entity directly or indirectly employed by any of them).

F. Contractor's duties and responsibilities for safety and protection shall continue until such time as all the Work is completed and Engineer has issued a notice to Owner and Contractor in accordance with Paragraph 15.06.B that the Work is acceptable (except as otherwise expressly provided in connection with Substantial Completion).

G. Contractor's duties and responsibilities for safety and protection shall resume whenever Contractor or any Subcontractor or Supplier returns to the Site to fulfill warranty or correction obligations, or to conduct other tasks arising from the Contract Documents.

7.13 *Safety Representative*

A. Contractor shall designate a qualified and experienced safety representative at the Site whose duties and responsibilities shall be the prevention of accidents and the maintaining and supervising of safety precautions and programs.

7.14 *Hazard Communication Programs*

A. Contractor shall be responsible for coordinating any exchange of material safety data sheets or other hazard communication information required to be made available to or

Copyright © 2013 National Society of Professional Engineers, American Council of Engineering Companies, and American Society of Civil Engineers. All rights reserved.

exchanged between or among employers at the Site in accordance with Laws or Regulations.

7.15 *Emergencies*

A. In emergencies affecting the safety or protection of persons or the Work or property at the Site or adjacent thereto, Contractor is obligated to act to prevent threatened damage, injury, or loss. Contractor shall give Engineer prompt written notice if Contractor believes that any significant changes in the Work or variations from the Contract Documents have been caused thereby or are required as a result thereof. If Engineer determines that a change in the Contract Documents is required because of the action taken by Contractor in response to such an emergency, a Work Change Directive or Change Order will be issued.

7.16 *Shop Drawings, Samples, and Other Submittals*

A. *Shop Drawing and Sample Submittal Requirements*:

1. Before submitting a Shop Drawing or Sample, Contractor shall have:

a. reviewed and coordinated the Shop Drawing or Sample with other Shop Drawings and Samples and with the requirements of the Work and the Contract Documents;

b. determined and verified all field measurements, quantities, dimensions, specified performance and design criteria, installation requirements, materials, catalog numbers, and similar information with respect thereto;

c. determined and verified the suitability of all materials and equipment offered with respect to the indicated application, fabrication, shipping, handling, storage, assembly, and installation pertaining to the performance of the Work; and

d. determined and verified all information relative to Contractor's responsibilities for means, methods, techniques, sequences, and procedures of construction, and safety precautions and programs incident thereto.

2. Each submittal shall bear a stamp or specific written certification that Contractor has satisfied Contractor's obligations under the Contract Documents with respect to Contractor's review of that submittal, and that Contractor approves the submittal.

3. With each submittal, Contractor shall give Engineer specific written notice of any variations that the Shop Drawing or Sample may have from the requirements of the Contract Documents. This notice shall be set forth in a written communication separate from the Shop Drawings or Sample submittal; and, in addition, in the case of Shop Drawings by a specific notation made on each Shop Drawing submitted to Engineer for review and approval of each such variation.

B. *Submittal Procedures for Shop Drawings and Samples*: Contractor shall submit Shop Drawings and Samples to Engineer for review and approval in accordance with the accepted Schedule of Submittals. Each submittal will be identified as Engineer may require.

1. *Shop Drawings*:

a. Contractor shall submit the number of copies required in the Specifications.

b. Data shown on the Shop Drawings will be complete with respect to quantities, dimensions, specified performance and design criteria, materials, and similar data to show Engineer the services, materials, and equipment Contractor proposes to

Copyright © 2013 National Society of Professional Engineers, American Council of Engineering Companies, and American Society of Civil Engineers. All rights reserved.

provide and to enable Engineer to review the information for the limited purposes required by Paragraph 7.16.D.

2. *Samples*:

   a. Contractor shall submit the number of Samples required in the Specifications.

   b. Contractor shall clearly identify each Sample as to material, Supplier, pertinent data such as catalog numbers, the use for which intended and other data as Engineer may require to enable Engineer to review the submittal for the limited purposes required by Paragraph 7.16.D.

3. Where a Shop Drawing or Sample is required by the Contract Documents or the Schedule of Submittals, any related Work performed prior to Engineer's review and approval of the pertinent submittal will be at the sole expense and responsibility of Contractor.

C. *Other Submittals*: Contractor shall submit other submittals to Engineer in accordance with the accepted Schedule of Submittals, and pursuant to the applicable terms of the Specifications.

D. *Engineer's Review*:

1. Engineer will provide timely review of Shop Drawings and Samples in accordance with the Schedule of Submittals acceptable to Engineer. Engineer's review and approval will be only to determine if the items covered by the submittals will, after installation or incorporation in the Work, conform to the information given in the Contract Documents and be compatible with the design concept of the completed Project as a functioning whole as indicated by the Contract Documents.

2. Engineer's review and approval will not extend to means, methods, techniques, sequences, or procedures of construction or to safety precautions or programs incident thereto.

3. Engineer's review and approval of a separate item as such will not indicate approval of the assembly in which the item functions.

4. Engineer's review and approval of a Shop Drawing or Sample shall not relieve Contractor from responsibility for any variation from the requirements of the Contract Documents unless Contractor has complied with the requirements of Paragraph 7.16.A.3 and Engineer has given written approval of each such variation by specific written notation thereof incorporated in or accompanying the Shop Drawing or Sample. Engineer will document any such approved variation from the requirements of the Contract Documents in a Field Order.

5. Engineer's review and approval of a Shop Drawing or Sample shall not relieve Contractor from responsibility for complying with the requirements of Paragraph 7.16.A and B.

6. Engineer's review and approval of a Shop Drawing or Sample, or of a variation from the requirements of the Contract Documents, shall not, under any circumstances, change the Contract Times or Contract Price, unless such changes are included in a Change Order.

7. Neither Engineer's receipt, review, acceptance or approval of a Shop Drawing, Sample, or other submittal shall result in such item becoming a Contract Document.

Copyright © 2013 National Society of Professional Engineers, American Council of Engineering Companies, and American Society of Civil Engineers. All rights reserved.

8. Contractor shall perform the Work in compliance with the requirements and commitments set forth in approved Shop Drawings and Samples, subject to the provisions of Paragraph 7.16.D.4.

E. *Resubmittal Procedures*:

1. Contractor shall make corrections required by Engineer and shall return the required number of corrected copies of Shop Drawings and submit, as required, new Samples for review and approval. Contractor shall direct specific attention in writing to revisions other than the corrections called for by Engineer on previous submittals.

2. Contractor shall furnish required submittals with sufficient information and accuracy to obtain required approval of an item with no more than three submittals. Engineer will record Engineer's time for reviewing a fourth or subsequent submittal of a Shop Drawings, sample, or other item requiring approval, and Contractor shall be responsible for Engineer's charges to Owner for such time. Owner may impose a set-off against payments due to Contractor to secure reimbursement for such charges.

3. If Contractor requests a change of a previously approved submittal item, Contractor shall be responsible for Engineer's charges to Owner for its review time, and Owner may impose a set-off against payments due to Contractor to secure reimbursement for such charges, unless the need for such change is beyond the control of Contractor.

7.17 *Contractor's General Warranty and Guarantee*

A. Contractor warrants and guarantees to Owner that all Work will be in accordance with the Contract Documents and will not be defective. Engineer and its officers, directors, members, partners, employees, agents, consultants, and subcontractors shall be entitled to rely on Contractor's warranty and guarantee.

B. Contractor's warranty and guarantee hereunder excludes defects or damage caused by:

1. abuse, modification, or improper maintenance or operation by persons other than Contractor, Subcontractors, Suppliers, or any other individual or entity for whom Contractor is responsible; or

2. normal wear and tear under normal usage.

C. Contractor's obligation to perform and complete the Work in accordance with the Contract Documents shall be absolute. None of the following will constitute an acceptance of Work that is not in accordance with the Contract Documents or a release of Contractor's obligation to perform the Work in accordance with the Contract Documents:

1. observations by Engineer;

2. recommendation by Engineer or payment by Owner of any progress or final payment;

3. the issuance of a certificate of Substantial Completion by Engineer or any payment related thereto by Owner;

4. use or occupancy of the Work or any part thereof by Owner;

5. any review and approval of a Shop Drawing or Sample submittal;

6. the issuance of a notice of acceptability by Engineer;

7. any inspection, test, or approval by others; or

8. any correction of defective Work by Owner.

Copyright © 2013 National Society of Professional Engineers, American Council of Engineering Companies, and American Society of Civil Engineers. All rights reserved.

D. If the Contract requires the Contractor to accept the assignment of a contract entered into by Owner, then the specific warranties, guarantees, and correction obligations contained in the assigned contract shall govern with respect to Contractor's performance obligations to Owner for the Work described in the assigned contract.

7.18 *Indemnification*

A. To the fullest extent permitted by Laws and Regulations, and in addition to any other obligations of Contractor under the Contract or otherwise, Contractor shall indemnify and hold harmless Owner and Engineer, and the officers, directors, members, partners, employees, agents, consultants and subcontractors of each and any of them from and against all claims, costs, losses, and damages (including but not limited to all fees and charges of engineers, architects, attorneys, and other professionals and all court or arbitration or other dispute resolution costs) arising out of or relating to the performance of the Work, provided that any such claim, cost, loss, or damage is attributable to bodily injury, sickness, disease, or death, or to injury to or destruction of tangible property (other than the Work itself), including the loss of use resulting therefrom but only to the extent caused by any negligent act or omission of Contractor, any Subcontractor, any Supplier, or any individual or entity directly or indirectly employed by any of them to perform any of the Work or anyone for whose acts any of them may be liable.

B. In any and all claims against Owner or Engineer or any of their officers, directors, members, partners, employees, agents, consultants, or subcontractors by any employee (or the survivor or personal representative of such employee) of Contractor, any Subcontractor, any Supplier, or any individual or entity directly or indirectly employed by any of them to perform any of the Work, or anyone for whose acts any of them may be liable, the indemnification obligation under Paragraph 7.18.A shall not be limited in any way by any limitation on the amount or type of damages, compensation, or benefits payable by or for Contractor or any such Subcontractor, Supplier, or other individual or entity under workers' compensation acts, disability benefit acts, or other employee benefit acts.

C. The indemnification obligations of Contractor under Paragraph 7.18.A shall not extend to the liability of Engineer and Engineer's officers, directors, members, partners, employees, agents, consultants and subcontractors arising out of:

1. the preparation or approval of, or the failure to prepare or approve maps, Drawings, opinions, reports, surveys, Change Orders, designs, or Specifications; or

2. giving directions or instructions, or failing to give them, if that is the primary cause of the injury or damage.

7.19 *Delegation of Professional Design Services*

A. Contractor will not be required to provide professional design services unless such services are specifically required by the Contract Documents for a portion of the Work or unless such services are required to carry out Contractor's responsibilities for construction means, methods, techniques, sequences and procedures. Contractor shall not be required to provide professional services in violation of applicable Laws and Regulations.

B. If professional design services or certifications by a design professional related to systems, materials, or equipment are specifically required of Contractor by the Contract Documents, Owner and Engineer will specify all performance and design criteria that such services must satisfy. Contractor shall cause such services or certifications to be provided by a properly licensed professional, whose signature and seal shall appear on all drawings, calculations, specifications, certifications, and other submittals prepared by such professional. Shop

Copyright © 2013 National Society of Professional Engineers, American Council of Engineering Companies, and American Society of Civil Engineers. All rights reserved.

Drawings and other submittals related to the Work designed or certified by such professional, if prepared by others, shall bear such professional's written approval when submitted to Engineer.

C. Owner and Engineer shall be entitled to rely upon the adequacy, accuracy, and completeness of the services, certifications, or approvals performed by such design professionals, provided Owner and Engineer have specified to Contractor all performance and design criteria that such services must satisfy.

D. Pursuant to this paragraph, Engineer's review and approval of design calculations and design drawings will be only for the limited purpose of checking for conformance with performance and design criteria given and the design concept expressed in the Contract Documents. Engineer's review and approval of Shop Drawings and other submittals (except design calculations and design drawings) will be only for the purpose stated in Paragraph 7.16.D.1.

E. Contractor shall not be responsible for the adequacy of the performance or design criteria specified by Owner or Engineer.

ARTICLE 8 – OTHER WORK AT THE SITE

8.01 *Other Work*

A. In addition to and apart from the Work under the Contract Documents, the Owner may perform other work at or adjacent to the Site. Such other work may be performed by Owner's employees, or through contracts between the Owner and third parties. Owner may also arrange to have third-party utility owners perform work on their utilities and facilities at or adjacent to the Site.

B. If Owner performs other work at or adjacent to the Site with Owner's employees, or through contracts for such other work, then Owner shall give Contractor written notice thereof prior to starting any such other work. If Owner has advance information regarding the start of any utility work at or adjacent to the Site, Owner shall provide such information to Contractor.

C. Contractor shall afford each other contractor that performs such other work, each utility owner performing other work, and Owner, if Owner is performing other work with Owner's employees, proper and safe access to the Site, and provide a reasonable opportunity for the introduction and storage of materials and equipment and the execution of such other work. Contractor shall do all cutting, fitting, and patching of the Work that may be required to properly connect or otherwise make its several parts come together and properly integrate with such other work. Contractor shall not endanger any work of others by cutting, excavating, or otherwise altering such work; provided, however, that Contractor may cut or alter others' work with the written consent of Engineer and the others whose work will be affected.

D. If the proper execution or results of any part of Contractor's Work depends upon work performed by others under this Article 8, Contractor shall inspect such other work and promptly report to Engineer in writing any delays, defects, or deficiencies in such other work that render it unavailable or unsuitable for the proper execution and results of Contractor's Work. Contractor's failure to so report will constitute an acceptance of such other work as fit and proper for integration with Contractor's Work except for latent defects and deficiencies in such other work.

Copyright © 2013 National Society of Professional Engineers, American Council of Engineering Companies, and American Society of Civil Engineers. All rights reserved.

8.02 *Coordination*

A. If Owner intends to contract with others for the performance of other work at or adjacent to the Site, to perform other work at or adjacent to the Site with Owner's employees, or to arrange to have utility owners perform work at or adjacent to the Site, the following will be set forth in the Supplementary Conditions or provided to Contractor prior to the start of any such other work:

1. the identity of the individual or entity that will have authority and responsibility for coordination of the activities among the various contractors;

2. an itemization of the specific matters to be covered by such authority and responsibility; and

3. the extent of such authority and responsibilities.

B. Unless otherwise provided in the Supplementary Conditions, Owner shall have sole authority and responsibility for such coordination.

8.03 *Legal Relationships*

A. If, in the course of performing other work at or adjacent to the Site for Owner, the Owner's employees, any other contractor working for Owner, or any utility owner for whom the Owner is responsible causes damage to the Work or to the property of Contractor or its Subcontractors, or delays, disrupts, interferes with, or increases the scope or cost of the performance of the Work, through actions or inaction, then Contractor shall be entitled to an equitable adjustment in the Contract Price or the Contract Times, or both. Contractor must submit any Change Proposal seeking an equitable adjustment in the Contract Price or the Contract Times under this paragraph within 30 days of the damaging, delaying, disrupting, or interfering event. The entitlement to, and extent of, any such equitable adjustment shall take into account information (if any) regarding such other work that was provided to Contractor in the Contract Documents prior to the submittal of the Bid or the final negotiation of the terms of the Contract. When applicable, any such equitable adjustment in Contract Price shall be conditioned on Contractor assigning to Owner all Contractor's rights against such other contractor or utility owner with respect to the damage, delay, disruption, or interference that is the subject of the adjustment. Contractor's entitlement to an adjustment of the Contract Times is conditioned on such adjustment being essential to Contractor's ability to complete the Work within the Contract Times.

B. Contractor shall take reasonable and customary measures to avoid damaging, delaying, disrupting, or interfering with the work of Owner, any other contractor, or any utility owner performing other work at or adjacent to the Site. If Contractor fails to take such measures and as a result damages, delays, disrupts, or interferes with the work of any such other contractor or utility owner, then Owner may impose a set-off against payments due to Contractor, and assign to such other contractor or utility owner the Owner's contractual rights against Contractor with respect to the breach of the obligations set forth in this paragraph.

C. When Owner is performing other work at or adjacent to the Site with Owner's employees, Contractor shall be liable to Owner for damage to such other work, and for the reasonable direct delay, disruption, and interference costs incurred by Owner as a result of Contractor's failure to take reasonable and customary measures with respect to Owner's other work. In response to such damage, delay, disruption, or interference, Owner may impose a set-off against payments due to Contractor.

Copyright © 2013 National Society of Professional Engineers, American Council of Engineering Companies, and American Society of Civil Engineers. All rights reserved.

D. If Contractor damages, delays, disrupts, or interferes with the work of any other contractor, or any utility owner performing other work at or adjacent to the Site, through Contractor's failure to take reasonable and customary measures to avoid such impacts, or if any claim arising out of Contractor's actions, inactions, or negligence in performance of the Work at or adjacent to the Site is made by any such other contractor or utility owner against Contractor, Owner, or Engineer, then Contractor shall (1) promptly attempt to settle the claim as to all parties through negotiations with such other contractor or utility owner, or otherwise resolve the claim by arbitration or other dispute resolution proceeding or at law, and (2) indemnify and hold harmless Owner and Engineer, and the officers, directors, members, partners, employees, agents, consultants and subcontractors of each and any of them from and against any such claims, and against all costs, losses, and damages (including but not limited to all fees and charges of engineers, architects, attorneys, and other professionals and all court or arbitration or other dispute resolution costs) arising out of or relating to such damage, delay, disruption, or interference.

ARTICLE 9 – OWNER'S RESPONSIBILITIES

9.01 *Communications to Contractor*

A. Except as otherwise provided in these General Conditions, Owner shall issue all communications to Contractor through Engineer.

9.02 *Replacement of Engineer*

A. Owner may at its discretion appoint an engineer to replace Engineer, provided Contractor makes no reasonable objection to the replacement engineer. The replacement engineer's status under the Contract Documents shall be that of the former Engineer.

9.03 *Furnish Data*

A. Owner shall promptly furnish the data required of Owner under the Contract Documents.

9.04 *Pay When Due*

A. Owner shall make payments to Contractor when they are due as provided in the Agreement.

9.05 *Lands and Easements; Reports, Tests, and Drawings*

A. Owner's duties with respect to providing lands and easements are set forth in Paragraph 5.01.

B. Owner's duties with respect to providing engineering surveys to establish reference points are set forth in Paragraph 4.03.

C. Article 5 refers to Owner's identifying and making available to Contractor copies of reports of explorations and tests of conditions at the Site, and drawings of physical conditions relating to existing surface or subsurface structures at the Site.

9.06 *Insurance*

A. Owner's responsibilities, if any, with respect to purchasing and maintaining liability and property insurance are set forth in Article 6.

9.07 *Change Orders*

A. Owner's responsibilities with respect to Change Orders are set forth in Article 11.

Copyright © 2013 National Society of Professional Engineers, American Council of Engineering Companies, and American Society of Civil Engineers. All rights reserved.

9.08 *Inspections, Tests, and Approvals*

A. Owner's responsibility with respect to certain inspections, tests, and approvals is set forth in Paragraph 14.02.B.

9.09 *Limitations on Owner's Responsibilities*

A. The Owner shall not supervise, direct, or have control or authority over, nor be responsible for, Contractor's means, methods, techniques, sequences, or procedures of construction, or the safety precautions and programs incident thereto, or for any failure of Contractor to comply with Laws and Regulations applicable to the performance of the Work. Owner will not be responsible for Contractor's failure to perform the Work in accordance with the Contract Documents.

9.10 *Undisclosed Hazardous Environmental Condition*

A. Owner's responsibility in respect to an undisclosed Hazardous Environmental Condition is set forth in Paragraph 5.06.

9.11 *Evidence of Financial Arrangements*

A. Upon request of Contractor, Owner shall furnish Contractor reasonable evidence that financial arrangements have been made to satisfy Owner's obligations under the Contract Documents (including obligations under proposed changes in the Work).

9.12 *Safety Programs*

A. While at the Site, Owner's employees and representatives shall comply with the specific applicable requirements of Contractor's safety programs of which Owner has been informed.

B. Owner shall furnish copies of any applicable Owner safety programs to Contractor.

ARTICLE 10 – ENGINEER'S STATUS DURING CONSTRUCTION

10.01 *Owner's Representative*

A. Engineer will be Owner's representative during the construction period. The duties and responsibilities and the limitations of authority of Engineer as Owner's representative during construction are set forth in the Contract.

10.02 *Visits to Site*

A. Engineer will make visits to the Site at intervals appropriate to the various stages of construction as Engineer deems necessary in order to observe as an experienced and qualified design professional the progress that has been made and the quality of the various aspects of Contractor's executed Work. Based on information obtained during such visits and observations, Engineer, for the benefit of Owner, will determine, in general, if the Work is proceeding in accordance with the Contract Documents. Engineer will not be required to make exhaustive or continuous inspections on the Site to check the quality or quantity of the Work. Engineer's efforts will be directed toward providing for Owner a greater degree of confidence that the completed Work will conform generally to the Contract Documents. On the basis of such visits and observations, Engineer will keep Owner informed of the progress of the Work and will endeavor to guard Owner against defective Work.

B. Engineer's visits and observations are subject to all the limitations on Engineer's authority and responsibility set forth in Paragraph 10.08. Particularly, but without limitation, during

Copyright © 2013 National Society of Professional Engineers, American Council of Engineering Companies, and American Society of Civil Engineers. All rights reserved.

or as a result of Engineer's visits or observations of Contractor's Work, Engineer will not supervise, direct, control, or have authority over or be responsible for Contractor's means, methods, techniques, sequences, or procedures of construction, or the safety precautions and programs incident thereto, or for any failure of Contractor to comply with Laws and Regulations applicable to the performance of the Work.

10.03 *Project Representative*

A. If Owner and Engineer have agreed that Engineer will furnish a Resident Project Representative to represent Engineer at the Site and assist Engineer in observing the progress and quality of the Work, then the authority and responsibilities of any such Resident Project Representative will be as provided in the Supplementary Conditions, and limitations on the responsibilities thereof will be as provided in Paragraph 10.08. If Owner designates another representative or agent to represent Owner at the Site who is not Engineer's consultant, agent, or employee, the responsibilities and authority and limitations thereon of such other individual or entity will be as provided in the Supplementary Conditions.

10.04 *Rejecting Defective Work*

A. Engineer has the authority to reject Work in accordance with Article 14.

10.05 *Shop Drawings, Change Orders and Payments*

A. Engineer's authority, and limitations thereof, as to Shop Drawings and Samples, are set forth in Paragraph 7.16.

B. Engineer's authority, and limitations thereof, as to design calculations and design drawings submitted in response to a delegation of professional design services, if any, are set forth in Paragraph 7.19.

C. Engineer's authority as to Change Orders is set forth in Article 11.

D. Engineer's authority as to Applications for Payment is set forth in Article 15.

10.06 *Determinations for Unit Price Work*

A. Engineer will determine the actual quantities and classifications of Unit Price Work performed by Contractor as set forth in Paragraph 13.03.

10.07 *Decisions on Requirements of Contract Documents and Acceptability of Work*

A. Engineer will render decisions regarding the requirements of the Contract Documents, and judge the acceptability of the Work, pursuant to the specific procedures set forth herein for initial interpretations, Change Proposals, and acceptance of the Work. In rendering such decisions and judgments, Engineer will not show partiality to Owner or Contractor, and will not be liable to Owner, Contractor, or others in connection with any proceedings, interpretations, decisions, or judgments conducted or rendered in good faith.

10.08 *Limitations on Engineer's Authority and Responsibilities*

A. Neither Engineer's authority or responsibility under this Article 10 or under any other provision of the Contract, nor any decision made by Engineer in good faith either to exercise or not exercise such authority or responsibility or the undertaking, exercise, or performance of any authority or responsibility by Engineer, shall create, impose, or give rise to any duty in contract, tort, or otherwise owed by Engineer to Contractor, any Subcontractor, any Supplier, any other individual or entity, or to any surety for or employee or agent of any of them.

Copyright © 2013 National Society of Professional Engineers, American Council of Engineering Companies, and American Society of Civil Engineers. All rights reserved.

B. Engineer will not supervise, direct, control, or have authority over or be responsible for Contractor's means, methods, techniques, sequences, or procedures of construction, or the safety precautions and programs incident thereto, or for any failure of Contractor to comply with Laws and Regulations applicable to the performance of the Work. Engineer will not be responsible for Contractor's failure to perform the Work in accordance with the Contract Documents.

C. Engineer will not be responsible for the acts or omissions of Contractor or of any Subcontractor, any Supplier, or of any other individual or entity performing any of the Work.

D. Engineer's review of the final Application for Payment and accompanying documentation and all maintenance and operating instructions, schedules, guarantees, bonds, certificates of inspection, tests and approvals, and other documentation required to be delivered by Paragraph 15.06.A will only be to determine generally that their content complies with the requirements of, and in the case of certificates of inspections, tests, and approvals, that the results certified indicate compliance with the Contract Documents.

E. The limitations upon authority and responsibility set forth in this Paragraph 10.08 shall also apply to the Resident Project Representative, if any.

10.09 *Compliance with Safety Program*

A. While at the Site, Engineer's employees and representatives will comply with the specific applicable requirements of Owner's and Contractor's safety programs (if any) of which Engineer has been informed.

ARTICLE 11 – AMENDING THE CONTRACT DOCUMENTS; CHANGES IN THE WORK

11.01 *Amending and Supplementing Contract Documents*

A. The Contract Documents may be amended or supplemented by a Change Order, a Work Change Directive, or a Field Order.

1. *Change Orders*:

a. If an amendment or supplement to the Contract Documents includes a change in the Contract Price or the Contract Times, such amendment or supplement must be set forth in a Change Order. A Change Order also may be used to establish amendments and supplements of the Contract Documents that do not affect the Contract Price or Contract Times.

b. Owner and Contractor may amend those terms and conditions of the Contract Documents that do not involve (1) the performance or acceptability of the Work, (2) the design (as set forth in the Drawings, Specifications, or otherwise), or (3) other engineering or technical matters, without the recommendation of the Engineer. Such an amendment shall be set forth in a Change Order.

2. *Work Change Directives*: A Work Change Directive will not change the Contract Price or the Contract Times but is evidence that the parties expect that the modification ordered or documented by a Work Change Directive will be incorporated in a subsequently issued Change Order, following negotiations by the parties as to the Work Change Directive's effect, if any, on the Contract Price and Contract Times; or, if negotiations are unsuccessful, by a determination under the terms of the Contract Documents governing adjustments, expressly including Paragraph 11.04 regarding change of Contract Price. Contractor must submit any Change Proposal seeking an

Copyright © 2013 National Society of Professional Engineers, American Council of Engineering Companies, and American Society of Civil Engineers. All rights reserved.

adjustment of the Contract Price or the Contract Times, or both, no later than 30 days after the completion of the Work set out in the Work Change Directive. Owner must submit any Claim seeking an adjustment of the Contract Price or the Contract Times, or both, no later than 60 days after issuance of the Work Change Directive.

3. *Field Orders*: Engineer may authorize minor changes in the Work if the changes do not involve an adjustment in the Contract Price or the Contract Times and are compatible with the design concept of the completed Project as a functioning whole as indicated by the Contract Documents. Such changes will be accomplished by a Field Order and will be binding on Owner and also on Contractor, which shall perform the Work involved promptly. If Contractor believes that a Field Order justifies an adjustment in the Contract Price or Contract Times, or both, then before proceeding with the Work at issue, Contractor shall submit a Change Proposal as provided herein.

11.02 *Owner-Authorized Changes in the Work*

A. Without invalidating the Contract and without notice to any surety, Owner may, at any time or from time to time, order additions, deletions, or revisions in the Work. Such changes shall be supported by Engineer's recommendation, to the extent the change involves the design (as set forth in the Drawings, Specifications, or otherwise), or other engineering or technical matters. Such changes may be accomplished by a Change Order, if Owner and Contractor have agreed as to the effect, if any, of the changes on Contract Times or Contract Price; or by a Work Change Directive. Upon receipt of any such document, Contractor shall promptly proceed with the Work involved; or, in the case of a deletion in the Work, promptly cease construction activities with respect to such deleted Work. Added or revised Work shall be performed under the applicable conditions of the Contract Documents. Nothing in this paragraph shall obligate Contractor to undertake work that Contractor reasonably concludes cannot be performed in a manner consistent with Contractor's safety obligations under the Contract Documents or Laws and Regulations.

11.03 *Unauthorized Changes in the Work*

A. Contractor shall not be entitled to an increase in the Contract Price or an extension of the Contract Times with respect to any work performed that is not required by the Contract Documents, as amended, modified, or supplemented, except in the case of an emergency as provided in Paragraph 7.15 or in the case of uncovering Work as provided in Paragraph 14.05.

11.04 *Change of Contract Price*

A. The Contract Price may only be changed by a Change Order. Any Change Proposal for an adjustment in the Contract Price shall comply with the provisions of Paragraph 11.06. Any Claim for an adjustment of Contract Price shall comply with the provisions of Article 12.

B. An adjustment in the Contract Price will be determined as follows:

1. where the Work involved is covered by unit prices contained in the Contract Documents, then by application of such unit prices to the quantities of the items involved (subject to the provisions of Paragraph 13.03); or

2. where the Work involved is not covered by unit prices contained in the Contract Documents, then by a mutually agreed lump sum (which may include an allowance for overhead and profit not necessarily in accordance with Paragraph 11.04.C.2); or

3. where the Work involved is not covered by unit prices contained in the Contract Documents and the parties do not reach mutual agreement to a lump sum, then on

Copyright © 2013 National Society of Professional Engineers, American Council of Engineering Companies, and American Society of Civil Engineers. All rights reserved.

the basis of the Cost of the Work (determined as provided in Paragraph 13.01) plus a Contractor's fee for overhead and profit (determined as provided in Paragraph 11.04.C).

C. *Contractor's Fee*: When applicable, the Contractor's fee for overhead and profit shall be determined as follows:

1. a mutually acceptable fixed fee; or

2. if a fixed fee is not agreed upon, then a fee based on the following percentages of the various portions of the Cost of the Work:

a. for costs incurred under Paragraphs 13.01.B.1 and 13.01.B.2, the Contractor's fee shall be 15 percent;

b. for costs incurred under Paragraph 13.01.B.3, the Contractor's fee shall be five percent;

c. where one or more tiers of subcontracts are on the basis of Cost of the Work plus a fee and no fixed fee is agreed upon, the intent of Paragraphs 11.04.C.2.a and 11.04.C.2.b is that the Contractor's fee shall be based on: (1) a fee of 15 percent of the costs incurred under Paragraphs 13.01.A.1 and 13.01.A.2 by the Subcontractor that actually performs the Work, at whatever tier, and (2) with respect to Contractor itself and to any Subcontractors of a tier higher than that of the Subcontractor that actually performs the Work, a fee of five percent of the amount (fee plus underlying costs incurred) attributable to the next lower tier Subcontractor; provided, however, that for any such subcontracted work the maximum total fee to be paid by Owner shall be no greater than 27 percent of the costs incurred by the Subcontractor that actually performs the work;

d. no fee shall be payable on the basis of costs itemized under Paragraphs 13.01.B.4, 13.01.B.5, and 13.01.C;

e. the amount of credit to be allowed by Contractor to Owner for any change which results in a net decrease in cost will be the amount of the actual net decrease in cost plus a deduction in Contractor's fee by an amount equal to five percent of such net decrease; and

f. when both additions and credits are involved in any one change, the adjustment in Contractor's fee shall be computed on the basis of the net change in accordance with Paragraphs 11.04.C.2.a through 11.04.C.2.e, inclusive.

11.05 *Change of Contract Times*

A. The Contract Times may only be changed by a Change Order. Any Change Proposal for an adjustment in the Contract Times shall comply with the provisions of Paragraph 11.06. Any Claim for an adjustment in the Contract Times shall comply with the provisions of Article 12.

B. An adjustment of the Contract Times shall be subject to the limitations set forth in Paragraph 4.05, concerning delays in Contractor's progress.

11.06 *Change Proposals*

A. Contractor shall submit a Change Proposal to Engineer to request an adjustment in the Contract Times or Contract Price; appeal an initial decision by Engineer concerning the requirements of the Contract Documents or relating to the acceptability of the Work under the Contract Documents; contest a set-off against payment due; or seek other relief under

Copyright © 2013 National Society of Professional Engineers, American Council of Engineering Companies, and American Society of Civil Engineers. All rights reserved.

the Contract. The Change Proposal shall specify any proposed change in Contract Times or Contract Price, or both, or other proposed relief, and explain the reason for the proposed change, with citations to any governing or applicable provisions of the Contract Documents.

1. *Procedures*: Contractor shall submit each Change Proposal to Engineer promptly (but in no event later than 30 days) after the start of the event giving rise thereto, or after such initial decision. The Contractor shall submit supporting data, including the proposed change in Contract Price or Contract Time (if any), to the Engineer and Owner within 15 days after the submittal of the Change Proposal. The supporting data shall be accompanied by a written statement that the supporting data are accurate and complete, and that any requested time or price adjustment is the entire adjustment to which Contractor believes it is entitled as a result of said event. Engineer will advise Owner regarding the Change Proposal, and consider any comments or response from Owner regarding the Change Proposal.

2. *Engineer's Action*: Engineer will review each Change Proposal and, within 30 days after receipt of the Contractor's supporting data, either deny the Change Proposal in whole, approve it in whole, or deny it in part and approve it in part. Such actions shall be in writing, with a copy provided to Owner and Contractor. If Engineer does not take action on the Change Proposal within 30 days, then either Owner or Contractor may at any time thereafter submit a letter to the other party indicating that as a result of Engineer's inaction the Change Proposal is deemed denied, thereby commencing the time for appeal of the denial under Article 12.

3. *Binding Decision*: Engineer's decision will be final and binding upon Owner and Contractor, unless Owner or Contractor appeals the decision by filing a Claim under Article 12.

B. *Resolution of Certain Change Proposals*: If the Change Proposal does not involve the design (as set forth in the Drawings, Specifications, or otherwise), the acceptability of the Work, or other engineering or technical matters, then Engineer will notify the parties that the Engineer is unable to resolve the Change Proposal. For purposes of further resolution of such a Change Proposal, such notice shall be deemed a denial, and Contractor may choose to seek resolution under the terms of Article 12.

11.07 *Execution of Change Orders*

A. Owner and Contractor shall execute appropriate Change Orders covering:

1. changes in the Contract Price or Contract Times which are agreed to by the parties, including any undisputed sum or amount of time for Work actually performed in accordance with a Work Change Directive;

2. changes in Contract Price resulting from an Owner set-off, unless Contractor has duly contested such set-off;

3. changes in the Work which are: (a) ordered by Owner pursuant to Paragraph 11.02, (b) required because of Owner's acceptance of defective Work under Paragraph 14.04 or Owner's correction of defective Work under Paragraph 14.07, or (c) agreed to by the parties, subject to the need for Engineer's recommendation if the change in the Work involves the design (as set forth in the Drawings, Specifications, or otherwise), or other engineering or technical matters; and

4. changes in the Contract Price or Contract Times, or other changes, which embody the substance of any final and binding results under Paragraph 11.06, or Article 12.

Copyright © 2013 National Society of Professional Engineers, American Council of Engineering Companies, and American Society of Civil Engineers. All rights reserved.

B. If Owner or Contractor refuses to execute a Change Order that is required to be executed under the terms of this Paragraph 11.07, it shall be deemed to be of full force and effect, as if fully executed.

11.08 *Notification to Surety*

A. If the provisions of any bond require notice to be given to a surety of any change affecting the general scope of the Work or the provisions of the Contract Documents (including, but not limited to, Contract Price or Contract Times), the giving of any such notice will be Contractor's responsibility. The amount of each applicable bond will be adjusted to reflect the effect of any such change.

ARTICLE 12 – CLAIMS

12.01 *Claims*

A. *Claims Process*: The following disputes between Owner and Contractor shall be submitted to the Claims process set forth in this Article:

1. Appeals by Owner or Contractor of Engineer's decisions regarding Change Proposals;

2. Owner demands for adjustments in the Contract Price or Contract Times, or other relief under the Contract Documents; and

3. Disputes that Engineer has been unable to address because they do not involve the design (as set forth in the Drawings, Specifications, or otherwise), the acceptability of the Work, or other engineering or technical matters.

B. *Submittal of Claim*: The party submitting a Claim shall deliver it directly to the other party to the Contract promptly (but in no event later than 30 days) after the start of the event giving rise thereto; in the case of appeals regarding Change Proposals within 30 days of the decision under appeal. The party submitting the Claim shall also furnish a copy to the Engineer, for its information only. The responsibility to substantiate a Claim shall rest with the party making the Claim. In the case of a Claim by Contractor seeking an increase in the Contract Times or Contract Price, or both, Contractor shall certify that the Claim is made in good faith, that the supporting data are accurate and complete, and that to the best of Contractor's knowledge and belief the amount of time or money requested accurately reflects the full amount to which Contractor is entitled.

C. *Review and Resolution*: The party receiving a Claim shall review it thoroughly, giving full consideration to its merits. The two parties shall seek to resolve the Claim through the exchange of information and direct negotiations. The parties may extend the time for resolving the Claim by mutual agreement. All actions taken on a Claim shall be stated in writing and submitted to the other party, with a copy to Engineer.

D. *Mediation*:

1. At any time after initiation of a Claim, Owner and Contractor may mutually agree to mediation of the underlying dispute. The agreement to mediate shall stay the Claim submittal and response process.

2. If Owner and Contractor agree to mediation, then after 60 days from such agreement, either Owner or Contractor may unilaterally terminate the mediation process, and the Claim submittal and decision process shall resume as of the date of the termination. If the mediation proceeds but is unsuccessful in resolving the dispute, the Claim

Copyright © 2013 National Society of Professional Engineers, American Council of Engineering Companies, and American Society of Civil Engineers. All rights reserved.

submittal and decision process shall resume as of the date of the conclusion of the mediation, as determined by the mediator.

3. Owner and Contractor shall each pay one-half of the mediator's fees and costs.

E. *Partial Approval*: If the party receiving a Claim approves the Claim in part and denies it in part, such action shall be final and binding unless within 30 days of such action the other party invokes the procedure set forth in Article 17 for final resolution of disputes.

F. *Denial of Claim*: If efforts to resolve a Claim are not successful, the party receiving the Claim may deny it by giving written notice of denial to the other party. If the receiving party does not take action on the Claim within 90 days, then either Owner or Contractor may at any time thereafter submit a letter to the other party indicating that as a result of the inaction, the Claim is deemed denied, thereby commencing the time for appeal of the denial. A denial of the Claim shall be final and binding unless within 30 days of the denial the other party invokes the procedure set forth in Article 17 for the final resolution of disputes.

G. *Final and Binding Results*: If the parties reach a mutual agreement regarding a Claim, whether through approval of the Claim, direct negotiations, mediation, or otherwise; or if a Claim is approved in part and denied in part, or denied in full, and such actions become final and binding; then the results of the agreement or action on the Claim shall be incorporated in a Change Order to the extent they affect the Contract, including the Work, the Contract Times, or the Contract Price.

ARTICLE 13 – COST OF THE WORK; ALLOWANCES; UNIT PRICE WORK

13.01 *Cost of the Work*

A. *Purposes for Determination of Cost of the Work*: The term Cost of the Work means the sum of all costs necessary for the proper performance of the Work at issue, as further defined below. The provisions of this Paragraph 13.01 are used for two distinct purposes:

1. To determine Cost of the Work when Cost of the Work is a component of the Contract Price, under cost-plus-fee, time-and-materials, or other cost-based terms; or

2. To determine the value of a Change Order, Change Proposal, Claim, set-off, or other adjustment in Contract Price. When the value of any such adjustment is determined on the basis of Cost of the Work, Contractor is entitled only to those additional or incremental costs required because of the change in the Work or because of the event giving rise to the adjustment.

B. *Costs Included*: Except as otherwise may be agreed to in writing by Owner, costs included in the Cost of the Work shall be in amounts no higher than those prevailing in the locality of the Project, shall not include any of the costs itemized in Paragraph 13.01.C, and shall include only the following items:

1. Payroll costs for employees in the direct employ of Contractor in the performance of the Work under schedules of job classifications agreed upon by Owner and Contractor. Such employees shall include, without limitation, superintendents, foremen, and other personnel employed full time on the Work. Payroll costs for employees not employed full time on the Work shall be apportioned on the basis of their time spent on the Work. Payroll costs shall include, but not be limited to, salaries and wages plus the cost of fringe benefits, which shall include social security contributions, unemployment, excise, and payroll taxes, workers' compensation, health and retirement benefits, bonuses, sick leave, and vacation and holiday pay applicable

Copyright © 2013 National Society of Professional Engineers, American Council of Engineering Companies, and American Society of Civil Engineers. All rights reserved.

thereto. The expenses of performing Work outside of regular working hours, on Saturday, Sunday, or legal holidays, shall be included in the above to the extent authorized by Owner.

2. Cost of all materials and equipment furnished and incorporated in the Work, including costs of transportation and storage thereof, and Suppliers' field services required in connection therewith. All cash discounts shall accrue to Contractor unless Owner deposits funds with Contractor with which to make payments, in which case the cash discounts shall accrue to Owner. All trade discounts, rebates, and refunds and returns from sale of surplus materials and equipment shall accrue to Owner, and Contractor shall make provisions so that they may be obtained.

3. Payments made by Contractor to Subcontractors for Work performed by Subcontractors. If required by Owner, Contractor shall obtain competitive bids from subcontractors acceptable to Owner and Contractor and shall deliver such bids to Owner, who will then determine, with the advice of Engineer, which bids, if any, will be acceptable. If any subcontract provides that the Subcontractor is to be paid on the basis of Cost of the Work plus a fee, the Subcontractor's Cost of the Work and fee shall be determined in the same manner as Contractor's Cost of the Work and fee as provided in this Paragraph 13.01.

4. Costs of special consultants (including but not limited to engineers, architects, testing laboratories, surveyors, attorneys, and accountants) employed for services specifically related to the Work.

5. Supplemental costs including the following:

    a. The proportion of necessary transportation, travel, and subsistence expenses of Contractor's employees incurred in discharge of duties connected with the Work.

    b. Cost, including transportation and maintenance, of all materials, supplies, equipment, machinery, appliances, office, and temporary facilities at the Site, and hand tools not owned by the workers, which are consumed in the performance of the Work, and cost, less market value, of such items used but not consumed which remain the property of Contractor.

    c. Rentals of all construction equipment and machinery, and the parts thereof, whether rented from Contractor or others in accordance with rental agreements approved by Owner with the advice of Engineer, and the costs of transportation, loading, unloading, assembly, dismantling, and removal thereof. All such costs shall be in accordance with the terms of said rental agreements. The rental of any such equipment, machinery, or parts shall cease when the use thereof is no longer necessary for the Work.

    d. Sales, consumer, use, and other similar taxes related to the Work, and for which Contractor is liable, as imposed by Laws and Regulations.

    e. Deposits lost for causes other than negligence of Contractor, any Subcontractor, or anyone directly or indirectly employed by any of them or for whose acts any of them may be liable, and royalty payments and fees for permits and licenses.

    f. Losses and damages (and related expenses) caused by damage to the Work, not compensated by insurance or otherwise, sustained by Contractor in connection with the performance of the Work (except losses and damages within the deductible amounts of property insurance established in accordance with Paragraph 6.05), provided such losses and damages have resulted from causes

Copyright © 2013 National Society of Professional Engineers, American Council of Engineering Companies, and American Society of Civil Engineers. All rights reserved.

other than the negligence of Contractor, any Subcontractor, or anyone directly or indirectly employed by any of them or for whose acts any of them may be liable. Such losses shall include settlements made with the written consent and approval of Owner. No such losses, damages, and expenses shall be included in the Cost of the Work for the purpose of determining Contractor's fee.

g. The cost of utilities, fuel, and sanitary facilities at the Site.

h. Minor expenses such as communication service at the Site, express and courier services, and similar petty cash items in connection with the Work.

i. The costs of premiums for all bonds and insurance that Contractor is required by the Contract Documents to purchase and maintain.

C. *Costs Excluded*: The term Cost of the Work shall not include any of the following items:

1. Payroll costs and other compensation of Contractor's officers, executives, principals (of partnerships and sole proprietorships), general managers, safety managers, engineers, architects, estimators, attorneys, auditors, accountants, purchasing and contracting agents, expediters, timekeepers, clerks, and other personnel employed by Contractor, whether at the Site or in Contractor's principal or branch office for general administration of the Work and not specifically included in the agreed upon schedule of job classifications referred to in Paragraph 13.01.B.1 or specifically covered by Paragraph 13.01.B.4. The payroll costs and other compensation excluded here are to be considered administrative costs covered by the Contractor's fee.

2. Expenses of Contractor's principal and branch offices other than Contractor's office at the Site.

3. Any part of Contractor's capital expenses, including interest on Contractor's capital employed for the Work and charges against Contractor for delinquent payments.

4. Costs due to the negligence of Contractor, any Subcontractor, or anyone directly or indirectly employed by any of them or for whose acts any of them may be liable, including but not limited to, the correction of defective Work, disposal of materials or equipment wrongly supplied, and making good any damage to property.

5. Other overhead or general expense costs of any kind and the costs of any item not specifically and expressly included in Paragraph 13.01.B.

D. *Contractor's Fee*: When the Work as a whole is performed on the basis of cost-plus, Contractor's fee shall be determined as set forth in the Agreement. When the value of any Work covered by a Change Order, Change Proposal, Claim, set-off, or other adjustment in Contract Price is determined on the basis of Cost of the Work, Contractor's fee shall be determined as set forth in Paragraph 11.04.C.

E. *Documentation*: Whenever the Cost of the Work for any purpose is to be determined pursuant to this Article 13, Contractor will establish and maintain records thereof in accordance with generally accepted accounting practices and submit in a form acceptable to Engineer an itemized cost breakdown together with supporting data.

13.02 *Allowances*

A. It is understood that Contractor has included in the Contract Price all allowances so named in the Contract Documents and shall cause the Work so covered to be performed for such sums and by such persons or entities as may be acceptable to Owner and Engineer.

Copyright © 2013 National Society of Professional Engineers, American Council of Engineering Companies, and American Society of Civil Engineers. All rights reserved.

B. *Cash Allowances*: Contractor agrees that:

1. the cash allowances include the cost to Contractor (less any applicable trade discounts) of materials and equipment required by the allowances to be delivered at the Site, and all applicable taxes; and

2. Contractor's costs for unloading and handling on the Site, labor, installation, overhead, profit, and other expenses contemplated for the cash allowances have been included in the Contract Price and not in the allowances, and no demand for additional payment on account of any of the foregoing will be valid.

C. *Contingency Allowance*: Contractor agrees that a contingency allowance, if any, is for the sole use of Owner to cover unanticipated costs.

D. Prior to final payment, an appropriate Change Order will be issued as recommended by Engineer to reflect actual amounts due Contractor on account of Work covered by allowances, and the Contract Price shall be correspondingly adjusted.

13.03 *Unit Price Work*

A. Where the Contract Documents provide that all or part of the Work is to be Unit Price Work, initially the Contract Price will be deemed to include for all Unit Price Work an amount equal to the sum of the unit price for each separately identified item of Unit Price Work times the estimated quantity of each item as indicated in the Agreement.

B. The estimated quantities of items of Unit Price Work are not guaranteed and are solely for the purpose of comparison of Bids and determining an initial Contract Price. Payments to Contractor for Unit Price Work will be based on actual quantities.

C. Each unit price will be deemed to include an amount considered by Contractor to be adequate to cover Contractor's overhead and profit for each separately identified item.

D. Engineer will determine the actual quantities and classifications of Unit Price Work performed by Contractor. Engineer will review with Contractor the Engineer's preliminary determinations on such matters before rendering a written decision thereon (by recommendation of an Application for Payment or otherwise). Engineer's written decision thereon will be final and binding (except as modified by Engineer to reflect changed factual conditions or more accurate data) upon Owner and Contractor, subject to the provisions of the following paragraph.

E. Within 30 days of Engineer's written decision under the preceding paragraph, Contractor may submit a Change Proposal, or Owner may file a Claim, seeking an adjustment in the Contract Price if:

1. the quantity of any item of Unit Price Work performed by Contractor differs materially and significantly from the estimated quantity of such item indicated in the Agreement;

2. there is no corresponding adjustment with respect to any other item of Work; and

3. Contractor believes that it is entitled to an increase in Contract Price as a result of having incurred additional expense or Owner believes that Owner is entitled to a decrease in Contract Price, and the parties are unable to agree as to the amount of any such increase or decrease.

Copyright © 2013 National Society of Professional Engineers, American Council of Engineering Companies, and American Society of Civil Engineers. All rights reserved.

ARTICLE 14 – TESTS AND INSPECTIONS; CORRECTION, REMOVAL OR ACCEPTANCE OF DEFECTIVE WORK

14.01 *Access to Work*

A. Owner, Engineer, their consultants and other representatives and personnel of Owner, independent testing laboratories, and authorities having jurisdiction will have access to the Site and the Work at reasonable times for their observation, inspection, and testing. Contractor shall provide them proper and safe conditions for such access and advise them of Contractor's safety procedures and programs so that they may comply therewith as applicable.

14.02 *Tests, Inspections, and Approvals*

A. Contractor shall give Engineer timely notice of readiness of the Work (or specific parts thereof) for all required inspections and tests, and shall cooperate with inspection and testing personnel to facilitate required inspections and tests.

B. Owner shall retain and pay for the services of an independent inspector, testing laboratory, or other qualified individual or entity to perform all inspections and tests expressly required by the Contract Documents to be furnished and paid for by Owner, except that costs incurred in connection with tests or inspections of covered Work shall be governed by the provisions of Paragraph 14.05.

C. If Laws or Regulations of any public body having jurisdiction require any Work (or part thereof) specifically to be inspected, tested, or approved by an employee or other representative of such public body, Contractor shall assume full responsibility for arranging and obtaining such inspections, tests, or approvals, pay all costs in connection therewith, and furnish Engineer the required certificates of inspection or approval.

D. Contractor shall be responsible for arranging, obtaining, and paying for all inspections and tests required:

1. by the Contract Documents, unless the Contract Documents expressly allocate responsibility for a specific inspection or test to Owner;

2. to attain Owner's and Engineer's acceptance of materials or equipment to be incorporated in the Work;

3. by manufacturers of equipment furnished under the Contract Documents;

4. for testing, adjusting, and balancing of mechanical, electrical, and other equipment to be incorporated into the Work; and

5. for acceptance of materials, mix designs, or equipment submitted for approval prior to Contractor's purchase thereof for incorporation in the Work.

Such inspections and tests shall be performed by independent inspectors, testing laboratories, or other qualified individuals or entities acceptable to Owner and Engineer.

E. If the Contract Documents require the Work (or part thereof) to be approved by Owner, Engineer, or another designated individual or entity, then Contractor shall assume full responsibility for arranging and obtaining such approvals.

F. If any Work (or the work of others) that is to be inspected, tested, or approved is covered by Contractor without written concurrence of Engineer, Contractor shall, if requested by Engineer, uncover such Work for observation. Such uncovering shall be at Contractor's expense unless Contractor had given Engineer timely notice of Contractor's intention to

Copyright © 2013 National Society of Professional Engineers, American Council of Engineering Companies, and American Society of Civil Engineers. All rights reserved.

cover the same and Engineer had not acted with reasonable promptness in response to such notice.

14.03 *Defective Work*

A. *Contractor's Obligation*: It is Contractor's obligation to assure that the Work is not defective.

B. *Engineer's Authority*: Engineer has the authority to determine whether Work is defective, and to reject defective Work.

C. *Notice of Defects*: Prompt notice of all defective Work of which Owner or Engineer has actual knowledge will be given to Contractor.

D. *Correction, or Removal and Replacement*: Promptly after receipt of written notice of defective Work, Contractor shall correct all such defective Work, whether or not fabricated, installed, or completed, or, if Engineer has rejected the defective Work, remove it from the Project and replace it with Work that is not defective.

E. *Preservation of Warranties*: When correcting defective Work, Contractor shall take no action that would void or otherwise impair Owner's special warranty and guarantee, if any, on said Work.

F. *Costs and Damages*: In addition to its correction, removal, and replacement obligations with respect to defective Work, Contractor shall pay all claims, costs, losses, and damages arising out of or relating to defective Work, including but not limited to the cost of the inspection, testing, correction, removal, replacement, or reconstruction of such defective Work, fines levied against Owner by governmental authorities because the Work is defective, and the costs of repair or replacement of work of others resulting from defective Work. Prior to final payment, if Owner and Contractor are unable to agree as to the measure of such claims, costs, losses, and damages resulting from defective Work, then Owner may impose a reasonable set-off against payments due under Article 15.

14.04 *Acceptance of Defective Work*

A. If, instead of requiring correction or removal and replacement of defective Work, Owner prefers to accept it, Owner may do so (subject, if such acceptance occurs prior to final payment, to Engineer's confirmation that such acceptance is in general accord with the design intent and applicable engineering principles, and will not endanger public safety). Contractor shall pay all claims, costs, losses, and damages attributable to Owner's evaluation of and determination to accept such defective Work (such costs to be approved by Engineer as to reasonableness), and for the diminished value of the Work to the extent not otherwise paid by Contractor. If any such acceptance occurs prior to final payment, the necessary revisions in the Contract Documents with respect to the Work shall be incorporated in a Change Order. If the parties are unable to agree as to the decrease in the Contract Price, reflecting the diminished value of Work so accepted, then Owner may impose a reasonable set-off against payments due under Article 15. If the acceptance of defective Work occurs after final payment, Contractor shall pay an appropriate amount to Owner.

14.05 *Uncovering Work*

A. Engineer has the authority to require additional inspection or testing of the Work, whether or not the Work is fabricated, installed, or completed.

Copyright © 2013 National Society of Professional Engineers, American Council of Engineering Companies, and American Society of Civil Engineers. All rights reserved.

B. If any Work is covered contrary to the written request of Engineer, then Contractor shall, if requested by Engineer, uncover such Work for Engineer's observation, and then replace the covering, all at Contractor's expense.

C. If Engineer considers it necessary or advisable that covered Work be observed by Engineer or inspected or tested by others, then Contractor, at Engineer's request, shall uncover, expose, or otherwise make available for observation, inspection, or testing as Engineer may require, that portion of the Work in question, and provide all necessary labor, material, and equipment.

1. If it is found that the uncovered Work is defective, Contractor shall be responsible for all claims, costs, losses, and damages arising out of or relating to such uncovering, exposure, observation, inspection, and testing, and of satisfactory replacement or reconstruction (including but not limited to all costs of repair or replacement of work of others); and pending Contractor's full discharge of this responsibility the Owner shall be entitled to impose a reasonable set-off against payments due under Article 15.

2. If the uncovered Work is not found to be defective, Contractor shall be allowed an increase in the Contract Price or an extension of the Contract Times, or both, directly attributable to such uncovering, exposure, observation, inspection, testing, replacement, and reconstruction. If the parties are unable to agree as to the amount or extent thereof, then Contractor may submit a Change Proposal within 30 days of the determination that the Work is not defective.

14.06 *Owner May Stop the Work*

A. If the Work is defective, or Contractor fails to supply sufficient skilled workers or suitable materials or equipment, or fails to perform the Work in such a way that the completed Work will conform to the Contract Documents, then Owner may order Contractor to stop the Work, or any portion thereof, until the cause for such order has been eliminated; however, this right of Owner to stop the Work shall not give rise to any duty on the part of Owner to exercise this right for the benefit of Contractor, any Subcontractor, any Supplier, any other individual or entity, or any surety for, or employee or agent of any of them.

14.07 *Owner May Correct Defective Work*

A. If Contractor fails within a reasonable time after written notice from Engineer to correct defective Work, or to remove and replace rejected Work as required by Engineer, or if Contractor fails to perform the Work in accordance with the Contract Documents, or if Contractor fails to comply with any other provision of the Contract Documents, then Owner may, after seven days written notice to Contractor, correct or remedy any such deficiency.

B. In exercising the rights and remedies under this Paragraph 14.07, Owner shall proceed expeditiously. In connection with such corrective or remedial action, Owner may exclude Contractor from all or part of the Site, take possession of all or part of the Work and suspend Contractor's services related thereto, and incorporate in the Work all materials and equipment stored at the Site or for which Owner has paid Contractor but which are stored elsewhere. Contractor shall allow Owner, Owner's representatives, agents and employees, Owner's other contractors, and Engineer and Engineer's consultants access to the Site to enable Owner to exercise the rights and remedies under this paragraph.

C. All claims, costs, losses, and damages incurred or sustained by Owner in exercising the rights and remedies under this Paragraph 14.07 will be charged against Contractor as set-offs against payments due under Article 15. Such claims, costs, losses and damages will

Copyright © 2013 National Society of Professional Engineers, American Council of Engineering Companies, and American Society of Civil Engineers. All rights reserved.

include but not be limited to all costs of repair, or replacement of work of others destroyed or damaged by correction, removal, or replacement of Contractor's defective Work.

D. Contractor shall not be allowed an extension of the Contract Times because of any delay in the performance of the Work attributable to the exercise by Owner of Owner's rights and remedies under this Paragraph 14.07.

ARTICLE 15 – PAYMENTS TO CONTRACTOR; SET-OFFS; COMPLETION; CORRECTION PERIOD

15.01 *Progress Payments*

A. *Basis for Progress Payments*: The Schedule of Values established as provided in Article 2 will serve as the basis for progress payments and will be incorporated into a form of Application for Payment acceptable to Engineer. Progress payments on account of Unit Price Work will be based on the number of units completed during the pay period, as determined under the provisions of Paragraph 13.03. Progress payments for cost-based Work will be based on Cost of the Work completed by Contractor during the pay period.

B. *Applications for Payments*:

1. At least 20 days before the date established in the Agreement for each progress payment (but not more often than once a month), Contractor shall submit to Engineer for review an Application for Payment filled out and signed by Contractor covering the Work completed as of the date of the Application and accompanied by such supporting documentation as is required by the Contract Documents. If payment is requested on the basis of materials and equipment not incorporated in the Work but delivered and suitably stored at the Site or at another location agreed to in writing, the Application for Payment shall also be accompanied by a bill of sale, invoice, or other documentation warranting that Owner has received the materials and equipment free and clear of all Liens, and evidence that the materials and equipment are covered by appropriate property insurance, a warehouse bond, or other arrangements to protect Owner's interest therein, all of which must be satisfactory to Owner.

2. Beginning with the second Application for Payment, each Application shall include an affidavit of Contractor stating that all previous progress payments received on account of the Work have been applied on account to discharge Contractor's legitimate obligations associated with prior Applications for Payment.

3. The amount of retainage with respect to progress payments will be as stipulated in the Agreement.

C. *Review of Applications*:

1. Engineer will, within 10 days after receipt of each Application for Payment, including each resubmittal, either indicate in writing a recommendation of payment and present the Application to Owner, or return the Application to Contractor indicating in writing Engineer's reasons for refusing to recommend payment. In the latter case, Contractor may make the necessary corrections and resubmit the Application.

2. Engineer's recommendation of any payment requested in an Application for Payment will constitute a representation by Engineer to Owner, based on Engineer's observations of the executed Work as an experienced and qualified design professional, and on Engineer's review of the Application for Payment and the accompanying data and schedules, that to the best of Engineer's knowledge, information and belief:

Copyright © 2013 National Society of Professional Engineers, American Council of Engineering Companies, and American Society of Civil Engineers. All rights reserved.

a. the Work has progressed to the point indicated;

b. the quality of the Work is generally in accordance with the Contract Documents (subject to an evaluation of the Work as a functioning whole prior to or upon Substantial Completion, the results of any subsequent tests called for in the Contract Documents, a final determination of quantities and classifications for Unit Price Work under Paragraph 13.03, and any other qualifications stated in the recommendation); and

c. the conditions precedent to Contractor's being entitled to such payment appear to have been fulfilled in so far as it is Engineer's responsibility to observe the Work.

3. By recommending any such payment Engineer will not thereby be deemed to have represented that:

a. inspections made to check the quality or the quantity of the Work as it has been performed have been exhaustive, extended to every aspect of the Work in progress, or involved detailed inspections of the Work beyond the responsibilities specifically assigned to Engineer in the Contract; or

b. there may not be other matters or issues between the parties that might entitle Contractor to be paid additionally by Owner or entitle Owner to withhold payment to Contractor.

4. Neither Engineer's review of Contractor's Work for the purposes of recommending payments nor Engineer's recommendation of any payment, including final payment, will impose responsibility on Engineer:

a. to supervise, direct, or control the Work, or

b. for the means, methods, techniques, sequences, or procedures of construction, or the safety precautions and programs incident thereto, or

c. for Contractor's failure to comply with Laws and Regulations applicable to Contractor's performance of the Work, or

d. to make any examination to ascertain how or for what purposes Contractor has used the money paid on account of the Contract Price, or

e. to determine that title to any of the Work, materials, or equipment has passed to Owner free and clear of any Liens.

5. Engineer may refuse to recommend the whole or any part of any payment if, in Engineer's opinion, it would be incorrect to make the representations to Owner stated in Paragraph 15.01.C.2.

6. Engineer will recommend reductions in payment (set-offs) necessary in Engineer's opinion to protect Owner from loss because:

a. the Work is defective, requiring correction or replacement;

b. the Contract Price has been reduced by Change Orders;

c. Owner has been required to correct defective Work in accordance with Paragraph 14.07, or has accepted defective Work pursuant to Paragraph 14.04;

d. Owner has been required to remove or remediate a Hazardous Environmental Condition for which Contractor is responsible; or

Copyright © 2013 National Society of Professional Engineers, American Council of Engineering Companies, and American Society of Civil Engineers. All rights reserved.

e. Engineer has actual knowledge of the occurrence of any of the events that would constitute a default by Contractor and therefore justify termination for cause under the Contract Documents.

D. *Payment Becomes Due*:

1. Ten days after presentation of the Application for Payment to Owner with Engineer's recommendation, the amount recommended (subject to any Owner set-offs) will become due, and when due will be paid by Owner to Contractor.

E. *Reductions in Payment by Owner*:

1. In addition to any reductions in payment (set-offs) recommended by Engineer, Owner is entitled to impose a set-off against payment based on any of the following:

a. claims have been made against Owner on account of Contractor's conduct in the performance or furnishing of the Work, or Owner has incurred costs, losses, or damages on account of Contractor's conduct in the performance or furnishing of the Work, including but not limited to claims, costs, losses, or damages from workplace injuries, adjacent property damage, non-compliance with Laws and Regulations, and patent infringement;

b. Contractor has failed to take reasonable and customary measures to avoid damage, delay, disruption, and interference with other work at or adjacent to the Site;

c. Contractor has failed to provide and maintain required bonds or insurance;

d. Owner has been required to remove or remediate a Hazardous Environmental Condition for which Contractor is responsible;

e. Owner has incurred extra charges or engineering costs related to submittal reviews, evaluations of proposed substitutes, tests and inspections, or return visits to manufacturing or assembly facilities;

f. the Work is defective, requiring correction or replacement;

g. Owner has been required to correct defective Work in accordance with Paragraph 14.07, or has accepted defective Work pursuant to Paragraph 14.04;

h. the Contract Price has been reduced by Change Orders;

i. an event that would constitute a default by Contractor and therefore justify a termination for cause has occurred;

j. liquidated damages have accrued as a result of Contractor's failure to achieve Milestones, Substantial Completion, or final completion of the Work;

k. Liens have been filed in connection with the Work, except where Contractor has delivered a specific bond satisfactory to Owner to secure the satisfaction and discharge of such Liens;

l. there are other items entitling Owner to a set off against the amount recommended.

2. If Owner imposes any set-off against payment, whether based on its own knowledge or on the written recommendations of Engineer, Owner will give Contractor immediate written notice (with a copy to Engineer) stating the reasons for such action and the specific amount of the reduction, and promptly pay Contractor any amount

Copyright © 2013 National Society of Professional Engineers, American Council of Engineering Companies, and American Society of Civil Engineers. All rights reserved.

remaining after deduction of the amount so withheld. Owner shall promptly pay Contractor the amount so withheld, or any adjustment thereto agreed to by Owner and Contractor, if Contractor remedies the reasons for such action. The reduction imposed shall be binding on Contractor unless it duly submits a Change Proposal contesting the reduction.

3. Upon a subsequent determination that Owner's refusal of payment was not justified, the amount wrongfully withheld shall be treated as an amount due as determined by Paragraph 15.01.C.1 and subject to interest as provided in the Agreement.

15.02 *Contractor's Warranty of Title*

A. Contractor warrants and guarantees that title to all Work, materials, and equipment furnished under the Contract will pass to Owner free and clear of (1) all Liens and other title defects, and (2) all patent, licensing, copyright, or royalty obligations, no later than seven days after the time of payment by Owner.

15.03 *Substantial Completion*

A. When Contractor considers the entire Work ready for its intended use Contractor shall notify Owner and Engineer in writing that the entire Work is substantially complete and request that Engineer issue a certificate of Substantial Completion. Contractor shall at the same time submit to Owner and Engineer an initial draft of punch list items to be completed or corrected before final payment.

B. Promptly after Contractor's notification, Owner, Contractor, and Engineer shall make an inspection of the Work to determine the status of completion. If Engineer does not consider the Work substantially complete, Engineer will notify Contractor in writing giving the reasons therefor.

C. If Engineer considers the Work substantially complete, Engineer will deliver to Owner a preliminary certificate of Substantial Completion which shall fix the date of Substantial Completion. Engineer shall attach to the certificate a punch list of items to be completed or corrected before final payment. Owner shall have seven days after receipt of the preliminary certificate during which to make written objection to Engineer as to any provisions of the certificate or attached punch list. If, after considering the objections to the provisions of the preliminary certificate, Engineer concludes that the Work is not substantially complete, Engineer will, within 14 days after submission of the preliminary certificate to Owner, notify Contractor in writing that the Work is not substantially complete, stating the reasons therefor. If Owner does not object to the provisions of the certificate, or if despite consideration of Owner's objections Engineer concludes that the Work is substantially complete, then Engineer will, within said 14 days, execute and deliver to Owner and Contractor a final certificate of Substantial Completion (with a revised punch list of items to be completed or corrected) reflecting such changes from the preliminary certificate as Engineer believes justified after consideration of any objections from Owner.

D. At the time of receipt of the preliminary certificate of Substantial Completion, Owner and Contractor will confer regarding Owner's use or occupancy of the Work following Substantial Completion, review the builder's risk insurance policy with respect to the end of the builder's risk coverage, and confirm the transition to coverage of the Work under a permanent property insurance policy held by Owner. Unless Owner and Contractor agree otherwise in writing, Owner shall bear responsibility for security, operation, protection of the Work, property insurance, maintenance, heat, and utilities upon Owner's use or occupancy of the Work.

Copyright © 2013 National Society of Professional Engineers, American Council of Engineering Companies, and American Society of Civil Engineers. All rights reserved.

E. After Substantial Completion the Contractor shall promptly begin work on the punch list of items to be completed or corrected prior to final payment. In appropriate cases Contractor may submit monthly Applications for Payment for completed punch list items, following the progress payment procedures set forth above.

F. Owner shall have the right to exclude Contractor from the Site after the date of Substantial Completion subject to allowing Contractor reasonable access to remove its property and complete or correct items on the punch list.

15.04 *Partial Use or Occupancy*

A. Prior to Substantial Completion of all the Work, Owner may use or occupy any substantially completed part of the Work which has specifically been identified in the Contract Documents, or which Owner, Engineer, and Contractor agree constitutes a separately functioning and usable part of the Work that can be used by Owner for its intended purpose without significant interference with Contractor's performance of the remainder of the Work, subject to the following conditions:

1. At any time Owner may request in writing that Contractor permit Owner to use or occupy any such part of the Work that Owner believes to be substantially complete. If and when Contractor agrees that such part of the Work is substantially complete, Contractor, Owner, and Engineer will follow the procedures of Paragraph 15.03.A through E for that part of the Work.

2. At any time Contractor may notify Owner and Engineer in writing that Contractor considers any such part of the Work substantially complete and request Engineer to issue a certificate of Substantial Completion for that part of the Work.

3. Within a reasonable time after either such request, Owner, Contractor, and Engineer shall make an inspection of that part of the Work to determine its status of completion. If Engineer does not consider that part of the Work to be substantially complete, Engineer will notify Owner and Contractor in writing giving the reasons therefor. If Engineer considers that part of the Work to be substantially complete, the provisions of Paragraph 15.03 will apply with respect to certification of Substantial Completion of that part of the Work and the division of responsibility in respect thereof and access thereto.

4. No use or occupancy or separate operation of part of the Work may occur prior to compliance with the requirements of Paragraph 6.05 regarding builder's risk or other property insurance.

15.05 *Final Inspection*

A. Upon written notice from Contractor that the entire Work or an agreed portion thereof is complete, Engineer will promptly make a final inspection with Owner and Contractor and will notify Contractor in writing of all particulars in which this inspection reveals that the Work, or agreed portion thereof, is incomplete or defective. Contractor shall immediately take such measures as are necessary to complete such Work or remedy such deficiencies.

15.06 *Final Payment*

A. *Application for Payment*:

1. After Contractor has, in the opinion of Engineer, satisfactorily completed all corrections identified during the final inspection and has delivered, in accordance with the Contract Documents, all maintenance and operating instructions, schedules, guarantees, bonds, certificates or other evidence of insurance, certificates of

Copyright © 2013 National Society of Professional Engineers, American Council of Engineering Companies, and American Society of Civil Engineers. All rights reserved.

inspection, annotated record documents (as provided in Paragraph 7.11), and other documents, Contractor may make application for final payment.

2. The final Application for Payment shall be accompanied (except as previously delivered) by:

   a. all documentation called for in the Contract Documents;

   b. consent of the surety, if any, to final payment;

   c. satisfactory evidence that all title issues have been resolved such that title to all Work, materials, and equipment has passed to Owner free and clear of any Liens or other title defects, or will so pass upon final payment.

   d. a list of all disputes that Contractor believes are unsettled; and

   e. complete and legally effective releases or waivers (satisfactory to Owner) of all Lien rights arising out of the Work, and of Liens filed in connection with the Work.

3. In lieu of the releases or waivers of Liens specified in Paragraph 15.06.A.2 and as approved by Owner, Contractor may furnish receipts or releases in full and an affidavit of Contractor that: (a) the releases and receipts include all labor, services, material, and equipment for which a Lien could be filed; and (b) all payrolls, material and equipment bills, and other indebtedness connected with the Work for which Owner might in any way be responsible, or which might in any way result in liens or other burdens on Owner's property, have been paid or otherwise satisfied. If any Subcontractor or Supplier fails to furnish such a release or receipt in full, Contractor may furnish a bond or other collateral satisfactory to Owner to indemnify Owner against any Lien, or Owner at its option may issue joint checks payable to Contractor and specified Subcontractors and Suppliers.

B. *Engineer's Review of Application and Acceptance*:

1. If, on the basis of Engineer's observation of the Work during construction and final inspection, and Engineer's review of the final Application for Payment and accompanying documentation as required by the Contract Documents, Engineer is satisfied that the Work has been completed and Contractor's other obligations under the Contract have been fulfilled, Engineer will, within ten days after receipt of the final Application for Payment, indicate in writing Engineer's recommendation of final payment and present the Application for Payment to Owner for payment. Such recommendation shall account for any set-offs against payment that are necessary in Engineer's opinion to protect Owner from loss for the reasons stated above with respect to progress payments. At the same time Engineer will also give written notice to Owner and Contractor that the Work is acceptable, subject to the provisions of Paragraph 15.07. Otherwise, Engineer will return the Application for Payment to Contractor, indicating in writing the reasons for refusing to recommend final payment, in which case Contractor shall make the necessary corrections and resubmit the Application for Payment.

C. *Completion of Work*: The Work is complete (subject to surviving obligations) when it is ready for final payment as established by the Engineer's written recommendation of final payment.

D. *Payment Becomes Due*: Thirty days after the presentation to Owner of the final Application for Payment and accompanying documentation, the amount recommended by Engineer (less any further sum Owner is entitled to set off against Engineer's recommendation,

Copyright © 2013 National Society of Professional Engineers, American Council of Engineering Companies, and American Society of Civil Engineers. All rights reserved.

including but not limited to set-offs for liquidated damages and set-offs allowed under the provisions above with respect to progress payments) will become due and shall be paid by Owner to Contractor.

15.07 *Waiver of Claims*

A. The making of final payment will not constitute a waiver by Owner of claims or rights against Contractor. Owner expressly reserves claims and rights arising from unsettled Liens, from defective Work appearing after final inspection pursuant to Paragraph 15.05, from Contractor's failure to comply with the Contract Documents or the terms of any special guarantees specified therein, from outstanding Claims by Owner, or from Contractor's continuing obligations under the Contract Documents.

B. The acceptance of final payment by Contractor will constitute a waiver by Contractor of all claims and rights against Owner other than those pending matters that have been duly submitted or appealed under the provisions of Article 17.

15.08 *Correction Period*

A. If within one year after the date of Substantial Completion (or such longer period of time as may be prescribed by the terms of any applicable special guarantee required by the Contract Documents, or by any specific provision of the Contract Documents), any Work is found to be defective, or if the repair of any damages to the Site, adjacent areas that Contractor has arranged to use through construction easements or otherwise, and other adjacent areas used by Contractor as permitted by Laws and Regulations, is found to be defective, then Contractor shall promptly, without cost to Owner and in accordance with Owner's written instructions:

1. correct the defective repairs to the Site or such other adjacent areas;
2. correct such defective Work;
3. if the defective Work has been rejected by Owner, remove it from the Project and replace it with Work that is not defective, and
4. satisfactorily correct or repair or remove and replace any damage to other Work, to the work of others, or to other land or areas resulting therefrom.

B. If Contractor does not promptly comply with the terms of Owner's written instructions, or in an emergency where delay would cause serious risk of loss or damage, Owner may have the defective Work corrected or repaired or may have the rejected Work removed and replaced. Contractor shall pay all claims, costs, losses, and damages (including but not limited to all fees and charges of engineers, architects, attorneys, and other professionals and all court or arbitration or other dispute resolution costs) arising out of or relating to such correction or repair or such removal and replacement (including but not limited to all costs of repair or replacement of work of others).

C. In special circumstances where a particular item of equipment is placed in continuous service before Substantial Completion of all the Work, the correction period for that item may start to run from an earlier date if so provided in the Specifications.

D. Where defective Work (and damage to other Work resulting therefrom) has been corrected or removed and replaced under this paragraph, the correction period hereunder with respect to such Work will be extended for an additional period of one year after such correction or removal and replacement has been satisfactorily completed.

Copyright © 2013 National Society of Professional Engineers, American Council of Engineering Companies, and American Society of Civil Engineers. All rights reserved.

E. Contractor's obligations under this paragraph are in addition to all other obligations and warranties. The provisions of this paragraph shall not be construed as a substitute for, or a waiver of, the provisions of any applicable statute of limitation or repose.

ARTICLE 16 – SUSPENSION OF WORK AND TERMINATION

16.01 *Owner May Suspend Work*

A. At any time and without cause, Owner may suspend the Work or any portion thereof for a period of not more than 90 consecutive days by written notice to Contractor and Engineer. Such notice will fix the date on which Work will be resumed. Contractor shall resume the Work on the date so fixed. Contractor shall be entitled to an adjustment in the Contract Price or an extension of the Contract Times, or both, directly attributable to any such suspension. Any Change Proposal seeking such adjustments shall be submitted no later than 30 days after the date fixed for resumption of Work.

16.02 *Owner May Terminate for Cause*

A. The occurrence of any one or more of the following events will constitute a default by Contractor and justify termination for cause:

1. Contractor's persistent failure to perform the Work in accordance with the Contract Documents (including, but not limited to, failure to supply sufficient skilled workers or suitable materials or equipment or failure to adhere to the Progress Schedule);

2. Failure of Contractor to perform or otherwise to comply with a material term of the Contract Documents;

3. Contractor's disregard of Laws or Regulations of any public body having jurisdiction; or

4. Contractor's repeated disregard of the authority of Owner or Engineer.

B. If one or more of the events identified in Paragraph 16.02.A occurs, then after giving Contractor (and any surety) ten days written notice that Owner is considering a declaration that Contractor is in default and termination of the contract, Owner may proceed to:

1. declare Contractor to be in default, and give Contractor (and any surety) notice that the Contract is terminated; and

2. enforce the rights available to Owner under any applicable performance bond.

C. Subject to the terms and operation of any applicable performance bond, if Owner has terminated the Contract for cause, Owner may exclude Contractor from the Site, take possession of the Work, incorporate in the Work all materials and equipment stored at the Site or for which Owner has paid Contractor but which are stored elsewhere, and complete the Work as Owner may deem expedient.

D. Owner may not proceed with termination of the Contract under Paragraph 16.02.B if Contractor within seven days of receipt of notice of intent to terminate begins to correct its failure to perform and proceeds diligently to cure such failure.

E. If Owner proceeds as provided in Paragraph 16.02.B, Contractor shall not be entitled to receive any further payment until the Work is completed. If the unpaid balance of the Contract Price exceeds the cost to complete the Work, including all related claims, costs, losses, and damages (including but not limited to all fees and charges of engineers, architects, attorneys, and other professionals) sustained by Owner, such excess will be paid to Contractor. If the cost to complete the Work including such related claims, costs, losses,

Copyright © 2013 National Society of Professional Engineers, American Council of Engineering Companies, and American Society of Civil Engineers. All rights reserved.

and damages exceeds such unpaid balance, Contractor shall pay the difference to Owner. Such claims, costs, losses, and damages incurred by Owner will be reviewed by Engineer as to their reasonableness and, when so approved by Engineer, incorporated in a Change Order. When exercising any rights or remedies under this paragraph, Owner shall not be required to obtain the lowest price for the Work performed.

F. Where Contractor's services have been so terminated by Owner, the termination will not affect any rights or remedies of Owner against Contractor then existing or which may thereafter accrue, or any rights or remedies of Owner against Contractor or any surety under any payment bond or performance bond. Any retention or payment of money due Contractor by Owner will not release Contractor from liability.

G. If and to the extent that Contractor has provided a performance bond under the provisions of Paragraph 6.01.A, the provisions of that bond shall govern over any inconsistent provisions of Paragraphs 16.02.B and 16.02.D.

16.03 *Owner May Terminate For Convenience*

A. Upon seven days written notice to Contractor and Engineer, Owner may, without cause and without prejudice to any other right or remedy of Owner, terminate the Contract. In such case, Contractor shall be paid for (without duplication of any items):

1. completed and acceptable Work executed in accordance with the Contract Documents prior to the effective date of termination, including fair and reasonable sums for overhead and profit on such Work;

2. expenses sustained prior to the effective date of termination in performing services and furnishing labor, materials, or equipment as required by the Contract Documents in connection with uncompleted Work, plus fair and reasonable sums for overhead and profit on such expenses; and

3. other reasonable expenses directly attributable to termination, including costs incurred to prepare a termination for convenience cost proposal.

B. Contractor shall not be paid on account of loss of anticipated overhead, profits, or revenue, or other economic loss arising out of or resulting from such termination.

16.04 *Contractor May Stop Work or Terminate*

A. If, through no act or fault of Contractor, (1) the Work is suspended for more than 90 consecutive days by Owner or under an order of court or other public authority, or (2) Engineer fails to act on any Application for Payment within 30 days after it is submitted, or (3) Owner fails for 30 days to pay Contractor any sum finally determined to be due, then Contractor may, upon seven days written notice to Owner and Engineer, and provided Owner or Engineer do not remedy such suspension or failure within that time, terminate the contract and recover from Owner payment on the same terms as provided in Paragraph 16.03.

B. In lieu of terminating the Contract and without prejudice to any other right or remedy, if Engineer has failed to act on an Application for Payment within 30 days after it is submitted, or Owner has failed for 30 days to pay Contractor any sum finally determined to be due, Contractor may, seven days after written notice to Owner and Engineer, stop the Work until payment is made of all such amounts due Contractor, including interest thereon. The provisions of this paragraph are not intended to preclude Contractor from submitting a Change Proposal for an adjustment in Contract Price or Contract Times or otherwise for

Copyright © 2013 National Society of Professional Engineers, American Council of Engineering Companies, and American Society of Civil Engineers. All rights reserved.

expenses or damage directly attributable to Contractor's stopping the Work as permitted by this paragraph.

ARTICLE 17 – FINAL RESOLUTION OF DISPUTES

17.01 *Methods and Procedures*

A. *Disputes Subject to Final Resolution*: The following disputed matters are subject to final resolution under the provisions of this Article:

1. A timely appeal of an approval in part and denial in part of a Claim, or of a denial in full; and

2. Disputes between Owner and Contractor concerning the Work or obligations under the Contract Documents, and arising after final payment has been made.

B. *Final Resolution of Disputes*: For any dispute subject to resolution under this Article, Owner or Contractor may:

1. elect in writing to invoke the dispute resolution process provided for in the Supplementary Conditions; or

2. agree with the other party to submit the dispute to another dispute resolution process; or

3. if no dispute resolution process is provided for in the Supplementary Conditions or mutually agreed to, give written notice to the other party of the intent to submit the dispute to a court of competent jurisdiction.

ARTICLE 18 – MISCELLANEOUS

18.01 *Giving Notice*

A. Whenever any provision of the Contract Documents requires the giving of written notice, it will be deemed to have been validly given if:

1. delivered in person, by a commercial courier service or otherwise, to the individual or to a member of the firm or to an officer of the corporation for which it is intended; or

2. delivered at or sent by registered or certified mail, postage prepaid, to the last business address known to the sender of the notice.

18.02 *Computation of Times*

A. When any period of time is referred to in the Contract by days, it will be computed to exclude the first and include the last day of such period. If the last day of any such period falls on a Saturday or Sunday or on a day made a legal holiday by the law of the applicable jurisdiction, such day will be omitted from the computation.

18.03 *Cumulative Remedies*

A. The duties and obligations imposed by these General Conditions and the rights and remedies available hereunder to the parties hereto are in addition to, and are not to be construed in any way as a limitation of, any rights and remedies available to any or all of them which are otherwise imposed or available by Laws or Regulations, by special warranty or guarantee, or by other provisions of the Contract. The provisions of this paragraph will be as effective as if repeated specifically in the Contract Documents in connection with each particular duty, obligation, right, and remedy to which they apply.

Copyright © 2013 National Society of Professional Engineers, American Council of Engineering Companies, and American Society of Civil Engineers. All rights reserved.

18.04 *Limitation of Damages*

A. With respect to any and all Change Proposals, Claims, disputes subject to final resolution, and other matters at issue, neither Owner nor Engineer, nor any of their officers, directors, members, partners, employees, agents, consultants, or subcontractors, shall be liable to Contractor for any claims, costs, losses, or damages sustained by Contractor on or in connection with any other project or anticipated project.

18.05 *No Waiver*

A. A party's non-enforcement of any provision shall not constitute a waiver of that provision, nor shall it affect the enforceability of that provision or of the remainder of this Contract.

18.06 *Survival of Obligations*

A. All representations, indemnifications, warranties, and guarantees made in, required by, or given in accordance with the Contract, as well as all continuing obligations indicated in the Contract, will survive final payment, completion, and acceptance of the Work or termination or completion of the Contract or termination of the services of Contractor.

18.07 *Controlling Law*

A. This Contract is to be governed by the law of the state in which the Project is located.

18.08 *Headings*

A. Article and paragraph headings are inserted for convenience only and do not constitute parts of these General Conditions.

Copyright © 2013 National Society of Professional Engineers, American Council of Engineering Companies, and American Society of Civil Engineers. All rights reserved.

TAB D

Supplementary Conditions

SUPPLEMENTARY CONDITIONS
OF THE CONSTRUCTION CONTRACT

These Supplementary Conditions amend or supplement the Standard General Conditions of the Construction Contract, EJCDC® C-700 (2013 Edition). All provisions that are not so amended or supplemented remain in full force and effect.

The terms used in these Supplementary Conditions have the meanings stated in the General Conditions. Additional terms used in these Supplementary Conditions have the meanings stated below, which are applicable to both the singular and plural thereof.

ARTICLE 1 – DEFINITIONS AND TERMINOLOGY

SC-1.01. Add to the list of definitions in Paragraph 1.01.A by inserting the following as numbered items in their proper alphabetical positions:

> **Geotechnical Baseline Report (GBR) — The interpretive report prepared by or for Owner regarding subsurface conditions at the Site, and containing specific baseline geotechnical conditions that may be anticipated or relied upon for bidding and contract administration purposes, subject to the controlling provisions of the Contract, including the GBR's own terms. The GBR is a Contract Document.**
>
> **Geotechnical Data Report (GDR) — The factual report that collects and presents data regarding actual subsurface conditions at or adjacent to the Site, including Technical Data and other geotechnical data, prepared by or for Owner in support of the Geotechnical Baseline Report. The GDR's content may include logs of borings, trenches, and other site investigations, recorded measurements of subsurface water levels, the results of field and laboratory testing, and descriptions of the investigative and testing programs. The GDR does not include an interpretation of the data. If opinions, or interpretive or speculative non-factual comments or statements appear in a document that is labeled a GDR, such opinions, comments, or statements are not operative parts of the GDR and do not have contractual standing. Subject to that exception, the GDR is a Contract Document.**
>
> **Written Notice – Any notice to any party of the Agreement relative to any part of this Agreement in writing and considered delivered and service thereof completed, when posted by certified or registered mail to said party at the address stated in the Agreement for giving notices, or delivered in person to said party or his authorized representative.**

SC-1.01.20 After the word "Agreement" add the following words:

> **"OWNER may perform some or all of the duties and assume responsibilities of ENGINEER discussed in these General Conditions including, but not limited to, processing of applications of payments and reviewing submittals."**

SC-1.01.28 After the word "Performed" add the following words:

Copyright © 2013 National Society of Professional Engineers, American Council of Engineering Companies, and American Society of Civil Engineers. All rights reserved.

"Owner may designate in writing one or more authorized representatives who shall have express authority to bind the Owner with respect to matters requiring Owner's approval or authorization. The Engineer does not have such authority. The term "Owner" means the Owner, and the Owner's Authorized Representative. The Owner's Authorized Representative is not to be confused with the owner's representative to which Article 9 refers."

SC-1.01.A.8 Add the following language at the end of last sentence of Paragraph 1.01.A.8:

The Change Order form to be used on this Project is EJCDC C-941. Agency approval is required before Change Orders are effective.

SC 1.01.A.48 Add the following language at the end of the last sentence of Paragraph 1.01.A.48:

A Work Change Directive cannot change Contract Price or Contract Times without a subsequent Change Order.

SC 1.01.A.49 Add the following new Paragraph after Paragraph 1.01.A.48:

Abnormal Weather Conditions – Conditions of extreme or unusual weather for a given region, elevation, or season as determined by Engineer. Extreme or unusual weather that is typical for a given region, elevation, or season should not be considered Abnormal Weather Conditions.

SC 1.01.A.50 Add the following new Paragraph after Paragraph 1.01.A.49:

Agency - The Project is financed in whole or in part by USDA Rural Utilities Service pursuant to the Consolidated Farm and Rural Development Act (7 USC Section 1921 et seq.). The Rural Utilities Service programs are administered through the USDA Rural Development offices; therefore, the Agency for these documents is USDA Rural Development.

ARTICLE 2 – PRELIMINARY MATTERS

Paragraph 2.01.b - add the following new paragraph to the end of paragraph 2.01.b

The contractor shall not commence work under this contract until all insurance required under the contract has been obtained and approved by the owner. The Contractor shall not allow any subcontractor to commence work until the insurance required of the subcontractor has been obtained.

SC-2.02.A. Amend the first sentence of Paragraph 2.02.A. to read as follows:

Owner shall furnish to Contractor five copies of the Contract Documents (including one fully executed counterpart of the Agreement), and one copy in electronic portable document format (PDF).

SC-2.03. A after the word "review," add the words:

"and Owner's approval:"

ARTICLE 3 – DOCUMENTS: INTENT, REQUIREMENTS, REUSE

SC-3.06 Add the following new paragraphs immediately after Paragraph 3.05.B

The Contract Documents are complementary; what is called for by one is as binding as if called for by all. In resolving conflicts, errors, and discrepancies, the documents

Copyright © 2013 National Society of Professional Engineers, American Council of Engineering Companies, and American Society of Civil Engineers. All rights reserved.

shall be given precedence in the following order: Agreement, Specifications, and Drawings. Within the specifications the order of precedence shall be as follows: Special Provisions, Instructions to Bidders, General Conditions, and Technical Provisions. Figure dimensions on Drawings shall govern over scale/dimensions, and detailed Drawings shall govern over general Drawings. The Contractor assumes full responsibility for having familiarized itself with the nature and extent of the Contract Documents, work, locality, and local conditions that may in any manner affect the work to be done.

ARTICLE 4 – COMMENCEMENT AND PROGRESS OF THE WORK

SC 4.01.A Amend the last sentence of Paragraph 4.01.A by striking out the following words:

In no event will the Contract Times commence to run later than the sixtieth day after the day of Bid opening or the thirtieth day after the Effective Date of the Contract, whichever date is earlier.

SC 4.05.C.2 Amend Paragraph 4.05.C.2 by striking out the following text: "abnormal weather conditions;" and inserting the following text:

Abnormal Weather Conditions;

ARTICLE 5 – AVAILABILITY OF LANDS; SUBSURFACE AND PHYSICAL CONDITIONS; HAZARDOUS ENVIRONMENTAL CONDITIONS

SC-5.01 add the following new paragraphs immediately after paragraph 5.01.C:

D. If the Contractor, by direct negotiation and bargaining with any land owner, lessee or tenant, has secured for himself any right to use more space or greater privileges in the space provided for purposes incidental to the performance of the Contract, he shall, upon request of the Owner's Representative, furnish to the Owner's Representative proper evidence that such additional right have been properly secured and assurance that no damage to or claim upon the Owner will arrive there from. The Owner shall not be liable in any way for any expense incurred by the Contractor in securing any such right to use additional property.

E. If access is provided by means of any road or driveway or through private lands, the Contractor shall permit the regular Owners or users thereof to use the same so far as it is consistent with the construction of the work. If any existing driveway or road is damaged by his use thereof, the Contractor shall at once restore it to as good condition as it would have been had he not used it. The Contractor and those under him using any private road or driveway must assume to use that road or driveway on an "as is" basis and use it at their own risk. Neither the Owner nor the land owner shall be liable for damage to persons or property of the Contractor's forces arising from any defect in such road or driveway, except as such defect may be the consequence of negligence of the Owner or the land owner after the award of the Contract.

SC-5.03 Add the following new paragraphs immediately after Paragraph 5.03.B:

C. The following reports of explorations and tests of subsurface conditions at or adjacent to the Site are known to Owner:

1. Report dated October 4, 2016, prepared by Siefert Associates, LLC, 180 Church Street Naugatuck CT. entitled Geotechnical Engineering Report. The

Copyright © 2013 National Society of Professional Engineers, American Council of Engineering Companies, and American Society of Civil Engineers. All rights reserved.

Technical Data contained in such report upon whose accuracy Contractor may rely are those indicated in the definition of Technical Data in the General Conditions.

SC 5.06 Delete Paragraphs 5.06.A and 5.06.B in their entirety and insert the following:

A. No reports or drawings related to Hazardous Environmental Conditions at the Site are known to Owner.

B. Not Used.

ARTICLE 6 – BONDS AND INSURANCE

SC-6.02 Add the following paragraph immediately after Paragraph 6.02.B:

1. Contractor may obtain worker's compensation insurance from an insurance company that has not been rated by A.M. Best, provided that such company (a) is domiciled in the state in which the project is located, (b) is certified or authorized as a worker's compensation insurance provider by the appropriate state agency, and (c) has been accepted to provide worker's compensation insurance for similar projects by the state within the last 12 months.

SC-6.03.I Add the following paragraph immediately after Paragraph 6.03.I.5:

6. Insurance requirements shall also apply to all Subcontractors, and the Contractor shall not allow any Subcontractor to commence work until the Subcontractor's insurance has been obtained

SC 6.03 Add the following new paragraph immediately after Paragraph 6.03.J:

K. The limits of liability for the insurance required by Paragraph 6.03 of the General Conditions shall provide coverage for not less than the following amounts or greater where required by Laws and Regulations:

1. Workers' Compensation, and related coverages under Paragraphs 6.03.A.1 and A.2 of the General Conditions:

State:		**Statutory**
Federal, if applicable (e.g., Longshoreman's):		**Statutory**
Employer's Liability:		
Bodily injury, each accident	**$**	**1,000,000**
Bodily injury by disease, each employee	**$**	**1,000,000**
Bodily injury/disease aggregate	**$**	**2,000,000**
Foreign voluntary worker compensation		**Statutory**

Copyright © 2013 National Society of Professional Engineers, American Council of Engineering Companies, and American Society of Civil Engineers. All rights reserved.

2. **Contractor's Commercial General Liability under Paragraphs 6.03.B and 6.03.C of the General Conditions:**

General Aggregate	**$**	**2,000,000**
Products - Completed Operations Aggregate	**$**	**2,000,000**
Personal and Advertising Injury	**$**	
Each Occurrence (Bodily Injury and Property Damage)	**$**	**1,000,000**

3. **Automobile Liability under Paragraph 6.03.D. of the General Conditions:**

Combined Single Limit of	**$**	**1,000,000**

4. **Excess or Umbrella Liability:**

Per Occurrence	**$**	
General Aggregate	**$**	

5. **Contractor's Pollution Liability:**

Each Occurrence	**$**	**Not Applicable**
General Aggregate	**$**	**Not Applicable**

☒ **If box is checked, Contractor is not required to provide Contractor's Pollution Liability insurance under this Contract**

6. **Additional Insureds: In addition to Owner and Engineer, include as additional insureds the following:**

7. **Contractor's Professional Liability:**

Each Claim	**$**	**1,000,000**
Annual Aggregate	**$**	**2,000,000**

ARTICLE 7 – CONTRACTOR'S RESPONSIBILITIES

SC 7.01.A After the phrase "Contract Documents" at the end of the first sentence, add:

> **In a manner consistent with the degree of care and skill usually exercised by contractors experienced in projects of similar scope and in accordance with the standards of skill and care expected of contractors experienced in projects similar to the Project. Under no circumstances shall the quality and completeness of Work be less than recognized industry standards.**

SC 7.01.B At the end of the paragraph, add:

Copyright © 2013 National Society of Professional Engineers, American Council of Engineering Companies, and American Society of Civil Engineers. All rights reserved.

The Superintendent shall be satisfactory to the Owner and the Owner shall have the right to request Contractor to dismiss from the Project any Superintendent whose performance is not satisfactory to Owner. In the event Owner and Contractor fail to agree as to whether such dismissal is warranted, the Engineer shall make such determination and both parties shall agree to abide by the decision of the Engineer. The Contractor shall not replace the Superintendent without the consent of the Owner, which consent shall not be unreasonably withheld.

SC 7.02.A At the end of the paragraph, add:

The Contractor shall be responsible to the Owner for acts and omissions of the Contractor's employees, Subcontractors and their agents and employees, and other persons or entities performing portions of the Work for or on behalf of the Contractor or any of its Subcontractors. If the Owner or Engineer has reasonable objection to an employee of the Contractor or any of its Subcontractors, the Contractor must submit an acceptable substitute person or entity to the Owner.

SC 7.04.A Amend the third sentence of Paragraph 7.04.A by striking out the following words:

Unless the specification or description contains or is followed by words reading that no like, equivalent, or 'or-equal' item is permitted.

SC 7.04.A.1 Amend the last sentence of Paragraph a.3 by striking out;

"and;" and adding a period at the end of Paragraph a.3.

SC 7.04.A.1 Delete paragraph 7.04.A.1.a.4 in its entirety and insert the following in its place:

[Deleted]

SC 7.06.A Amend Paragraph 7.06.A by adding the following text to the end of the Paragraph:

The Contractor shall not award work valued at more than fifty percent of the Contract Price to Subcontractor(s), without prior written approval of the Owner.

SC 7.06.B Delete paragraph 7.06.B in its entirety and insert the following in its place:

[Deleted]

SC 7.06.E Amend the second sentence of Paragraph 7.06.E by striking out

"Owner may also require Contractor to retain specific replacements; provided, however, that".

SC 7.06 Add a new paragraph immediately after Paragraph 7.06.O:

P. The Contractor shall obtain lien waivers from Subcontractors and material suppliers upon payment to such parties and shall supply copies of the same to Owner promptly upon receipt thereof. If Contractor fails to comply with the provisions of this Paragraph 6.06.H, and for so long as such failure continues, Owner may make all payments attributable to a Subcontractor or material supplier co-payable to the Contractor and such Subcontractor or material supplier.

SC 7.08 Add a new paragraph immediately after Paragraph 7.08.A:

B. The Contractor will perform and complete the Work in accordance with all requirements of law and with the Contract Documents and no work shall be

Copyright © 2013 National Society of Professional Engineers, American Council of Engineering Companies, and American Society of Civil Engineers. All rights reserved.

undertaken until the Contractor has been issued all required permits. Contractor shall prosecute all work diligently to assure completion no later than the date specified therefore.

SC 7.09 Add a new paragraph immediately after Paragraph 7.09.A:

B. Owner is exempt from payment of sales and compensating use taxes of the State of *Connecticut* and of cities and counties thereof on all materials to be incorporated into the Work.

1. Owner will furnish the required certificates of tax exemption to Contractor for use in the purchase of supplies and materials to be incorporated into the Work.

2. Owner's exemption does not apply to construction tools, machinery, equipment, or other property purchased by or leased by Contractor, or to supplies or materials not incorporated into the Work.

SC 7.10.A after the word "Work" in the first sentence, add:

Contractor shall review the Contract Documents and notify the Owner and the Engineer of any discrepancy between building codes and regulations of which the Contractor has actual knowledge without independent investigation. The Contractor shall not violate any zoning, set-back or other locational requirements of applicable laws, codes or ordinances, or of any recorded covenants of which the Contractor has actual knowledge. If the Contractor observes or is told by any building inspector that portions of the Contract Documents are at variance with applicable laws, statutes ordinances, building codes, rules or regulations, the Contractor shall promptly notify the Engineer and Owner in writing, and necessary changes shall be accomplished by appropriate modification.

Paragraph 7.10.D - Add the following new paragraphs after Paragraph 7.10.C:

D. If any governmental body having jurisdiction over the Work requires licenses or registrations for the performance of the Work or any part thereof, the Contractor shall hold such valid licenses or registrations as may be required by law to prosecute the Work to completion. If any part of the Work for which such a license or registration is required is to be performed by Subcontractors of any tier, the Contractor shall ensure that such Subcontractors hold such valid licenses or registrations as may be required by law to prosecute said Work to completion.

SC 7.11.A Add a new paragraph immediately after Paragraph 7.11.A:

In the event that either party to this agreement terminates the agreement, the contract documents and project files that were maintained in paper and electronic formats shall be the property of and reside with the owner.

SC 7.17.A after the word guarantee at the end of the second sentence, add:

The Contractor warrants to the Owner and Engineer that materials and equipment furnished under the Contract will be of good quality and new unless otherwise required or permitted by the Contract Documents, that the Work will be free from defects not inherent in the quality required or permitted, and that the Work will

Copyright © 2013 National Society of Professional Engineers, American Council of Engineering Companies, and American Society of Civil Engineers. All rights reserved.

conform to the requirements of the Contract Documents. Work not conforming to these requirements, including substitutions not properly approved and authorized, may be considered defective. If required by the Owner or Engineer, the Contractor shall furnish satisfactory evidence as to the kind and quality of materials and equipment. The Contractor further warrants and represents that:

1. **The contractor is financially solvent, able to pay all debts as they mature and possessed of sufficient working capital to complete the work and perform all obligations under the contract documents;**

2. **The contractor is able to furnish the tools, materials, supplies, equipment and labor required to complete the work and perform all obligations under the contract documents, and has sufficient experience and competence to do so;**

3. **The contractor is authorized to do business in the state where the project is located and is properly licensed by all necessary governmental, public and other authorities having jurisdiction over the contractor and the project;**

4. **The persons executing the contract documents are authorized to do so;**

5. **The contractor has visited the site of the project and become familiar with the contract documents and the conditions of the site, and knows of no reason why the work cannot be performed as set forth in the contract documents;**

6. **The contractor shall warrant all work for a period of one (1) year after final completion; and**

7. **The contractor shall assign any extended warranties (in excess of the contractor's one (1) year warranty) on equipment and materials furnished as part of the work to the owner."**

SC 7.18A after the word performance at the end of line seven, add:

"or non-performance"

SC 9.11 Delete paragraph 9.11 in its entirety and insert the following in its place:

[Deleted]

ARTICLE 10 – ENGINEER'S STATUS DURING CONSTRUCTION

SC-10.03 Add the following new paragraphs immediately after Paragraph 10.03.A:

B. The Resident Project Representative (RPR) will be Engineer's representative at the Site, will act as directed by and under the supervision of Engineer, and will confer with Engineer regarding RPR's actions.

1. General: RPR's dealings in matters pertaining to the Work in general shall be with Engineer and Contractor. RPR's dealings with Subcontractors shall only be through or with the full knowledge and approval of Contractor. RPR shall

Copyright © 2013 National Society of Professional Engineers, American Council of Engineering Companies, and American Society of Civil Engineers. All rights reserved.

generally communicate with Owner only with the knowledge of and under the direction of Engineer.

2. **Schedules: Review the progress schedule, schedule of Shop Drawing and Sample submittals, and Schedule of Values prepared by Contractor and consult with Engineer concerning acceptability.**

3. **Conferences and Meetings: Attend meetings with Contractor, such as preconstruction conferences, progress meetings, job conferences, and other Project-related meetings, and prepare and circulate copies of minutes thereof.**

4. **Liaison:**

   a. **Serve as Engineer's liaison with Contractor. Working principally through Contractor's authorized representative or designee, assist in providing information regarding the provisions and intent of the Contract Documents.**

   b. **Assist Engineer in serving as Owner's liaison with Contractor when Contractor's operations affect Owner's on-Site operations.**

   c. **Assist in obtaining from Owner additional details or information, when required for proper execution of the Work.**

5. **Interpretation of Contract Documents: Report to Engineer when clarifications and interpretations of the Contract Documents are needed and transmit to Contractor clarifications and interpretations as issued by Engineer.**

6. **Shop Drawings and Samples:**

   a. **Record date of receipt of Samples and Contractor-approved Shop Drawings.**

   b. **Receive Samples which are furnished at the Site by Contractor, and notify Engineer of availability of Samples for examination.**

   c. **Advise Engineer and Contractor of the commencement of any portion of the Work requiring a Shop Drawing or Sample submittal for which RPR believes that the submittal has not been approved by Engineer.**

7. **Modifications: Consider and evaluate Contractor's suggestions for modifications in Drawings or Specifications and report such suggestions, together with RPR's recommendations, if any, to Engineer. Transmit to Contractor in writing decisions as issued by Engineer.**

8. **Review of Work and Rejection of Defective Work:**

   a. **Conduct on-Site observations of Contractor's work in progress to assist Engineer in determining if the Work is in general proceeding in accordance with the Contract Documents.**

   b. **Report to Engineer whenever RPR believes that any part of Contractor's work in progress is defective, will not produce a completed Project that conforms generally to the Contract Documents, or will imperil the integrity of the design concept of the completed**

Copyright © 2013 National Society of Professional Engineers, American Council of Engineering Companies, and American Society of Civil Engineers. All rights reserved.

Project as a functioning whole as indicated in the Contract Documents, or has been damaged, or does not meet the requirements of any inspection, test or approval required to be made; and advise Engineer of that part of work in progress that RPR believes should be corrected or rejected or should be uncovered for observation, or requires special testing, inspection or approval.

9. Inspections, Tests, and System Start-ups:

a. Verify that tests, equipment, and systems start-ups and operating and maintenance training are conducted in the presence of appropriate Owner's personnel, and that Contractor maintains adequate records thereof.

b. Observe, record, and report to Engineer appropriate details relative to the test procedures and systems start-ups.

10. Records:

a. Prepare a daily report or keep a diary or log book, recording Contractor's hours on the Site, Subcontractors present at the Site, weather conditions, data relative to questions of Change Orders, Field Orders, Work Change Directives, or changed conditions, Site visitors, deliveries of equipment or materials, daily activities, decisions, observations in general, and specific observations in more detail as in the case of observing test procedures; and send copies to Engineer.

b. Record names, addresses, fax numbers, e-mail addresses, web site locations, and telephone numbers of all Contractors, Subcontractors, and major Suppliers of materials and equipment.

c. Maintain records for use in preparing Project documentation.

11. Reports:

a. Furnish to Engineer periodic reports as required of progress of the Work and of Contractor's compliance with the Progress Schedule and schedule of Shop Drawing and Sample submittals.

b. Draft and recommend to Engineer proposed Change Orders, Work Change Directives, and Field Orders. Obtain backup material from Contractor.

c. Immediately notify Engineer of the occurrence of any Site accidents, emergencies, acts of God endangering the Work, force majeure or delay events, damage to property by fire or other causes, or the discovery of any Constituent of Concern or Hazardous Environmental Condition.

12. Payment Requests: Review applications for payment with Contractor for compliance with the established procedure for their submission and forward with recommendations to Engineer, noting particularly the relationship of the payment requested to the Schedule of Values, Work completed, and materials and equipment delivered at the Site but not incorporated in the Work.

Copyright © 2013 National Society of Professional Engineers, American Council of Engineering Companies, and American Society of Civil Engineers. All rights reserved.

13. **Certificates, Operation and Maintenance Manuals: During the course of the Work, verify that materials and equipment certificates, operation and maintenance manuals and other data required by the Contract Documents to be assembled and furnished by Contractor are applicable to the items actually installed and in accordance with the Contract Documents, and have these documents delivered to Engineer for review and forwarding to Owner prior to payment for that part of the Work.**

14. **Completion:**

    a. **Participate in Engineer's visits to the Site to determine Substantial Completion, assist in the determination of Substantial Completion and the preparation of a punch list of items to be completed or corrected.**

    b. **Participate in Engineer's final visit to the Site to determine completion of the Work, in the company of Owner and Contractor, and prepare a final punch list of items to be completed and deficiencies to be remedied.**

    c. **Observe whether all items on the final list have been completed or corrected and make recommendations to Engineer concerning acceptance and issuance of the notice of acceptability of the work.**

C. The RPR shall not:

1. **Authorize any deviation from the Contract Documents or substitution of materials or equipment (including "or-equal" items).**
2. **Exceed limitations of Engineer's authority as set forth in the Contract Documents.**
3. **Undertake any of the responsibilities of Contractor, Subcontractors, or Suppliers.**
4. **Advise on, issue directions relative to, or assume control over any aspect of the means, methods, techniques, sequences or procedures of Contractor's work.**
5. **Advise on, issue directions regarding, or assume control over security or safety practices, precautions, and programs in connection with the activities or operations of Owner or Contractor.**
6. **Participate in specialized field or laboratory tests or inspections conducted off-site by others except as specifically authorized by Engineer.**
7. **Accept Shop Drawing or Sample submittals from anyone other than Contractor.**
8. **Authorize Owner to occupy the Project in whole or in part.**

ARTICLE 11 – AMENDING THE CONTRACT DOCUMENTS; CHANGES IN THE WORK

SC 11.07.C Add the following new Paragraph after Paragraph 11.07B

All Contract Change Orders must be concurred in by Agency before they are effective.

Copyright © 2013 National Society of Professional Engineers, American Council of Engineering Companies, and American Society of Civil Engineers. All rights reserved.

ARTICLE 13 – COST OF THE WORK; ALLOWANCES; UNIT PRICE WORK

SC 13.01.B.5.c Delete Paragraph 13.01.B.5.c in its entirety and insert the following in its place:

c. Construction Equipment and Machinery:

1) Rentals of all construction equipment and machinery, and the parts thereof, in accordance with rental agreements approved by Owner with the advice of Engineer, and the costs of transportation, loading, unloading, assembly, dismantling, and removal thereof. All such costs shall be in accordance with the terms of said rental agreements. The rental of any such equipment, machinery, or parts shall cease when the use thereof is no longer necessary for the Work.

2) Costs for equipment and machinery owned by Contractor will be paid at a rate shown for such equipment in the Rental Rate Blue Book, including all rate adjustment tables and amendments. An hourly rate will be computed by dividing the monthly rates by 176. These computed rates will include all operating costs. Costs will include the time the equipment or machinery is in use on the changed Work and the costs of transportation, loading, unloading, assembly, dismantling, and removal when directly attributable to the changed Work. The cost of any such equipment or machinery, or parts thereof, shall cease to accrue when the use thereof is no longer necessary for the changed Work. Equipment or machinery with a value of less than $1,000 will be considered small tools.

SC 13.02.C Delete Paragraph 13.02.C in its entirety and insert the following in its place:

[Deleted]

ARTICLE 15 – PAYMENTS TO CONTRACTOR; SET-OFFS; COMPLETION; CORRECTION PERIOD

SC 15.01.A After the words "acceptable to Engineer add the words:

"and owner"

SC 15.01.B Amend the second sentence of Paragraph 15.01.B.1 by striking out the following text:

"a bill of sale, invoice, or other."

SC 15.01.B.3 Add the following language at the end of paragraph 15.01.B.3:

No payments will be made that would deplete the retainage, place in escrow any funds that are required for retainage, or invest the retainage for the benefit of the Contractor.

SC 15.01.B.4 Add the following new Paragraph after Paragraph 15.01.B.3:

The Application for Payment form to be used on this Project is EJCDC C-620. The Agency must approve all Applications for Payment before payment is made.

SC 15.01.D.1 Delete Paragraph 15.01.D.1 in its entirety and insert the following in its place:

The Application for Payment with Engineer's recommendations will be presented to the Owner and Agency for consideration. If both the Owner and Agency find the Application for Payment acceptable, the recommended amount less any reduction under the provisions of Paragraph 15.01.E will become due twenty (20) days after the

Copyright © 2013 National Society of Professional Engineers, American Council of Engineering Companies, and American Society of Civil Engineers. All rights reserved.

Application for Payment is presented to the Owner, and the Owner will make payment to the Contractor.

SC 15.02.A Amend Paragraph 15.02.A by striking out the following text:

"no later than seven days after the time of payment by Owner" and insert **"no later than the time of payment by Owner."**

ARTICLE 16 – SUSPENSION OF WORK AND TERMINATION

SC 16.02.A.1 Amend Paragraph 16.02.A.1 by:

Deleting the word "persistent".

SC 16.03.A.1 Amend Paragraph 16.03.A.1 by:

Delete the words "including fair and reasonable sums for overhead and profit on such Work."

SC 16.03.A.2 Amend Paragraph 16.03.A.2 by:

Delete the words "plus fair and reasonable sums for overhead and profit on such expenses."

SC 16.03.A.4 Amend Paragraph 16.03.A.3 by:

Add ", but no overhead and profit on work not executed."

SC 16.03 Add the following new Paragraph after Paragraph 16.03.B:

C. In no event shall the Contractor or any Subcontractor employed on the Project be entitled to profit, overhead, or damages on work that was not performed as of the date of termination, regardless of the reasons for termination."

D. Upon receipt of written notice from the Owner of such termination for the Owner's convenience, the Contractor shall:

1. **cease operations as directed by the Owner in the notice;**
2. **take actions necessary, or that the Owner may direct, for the protection and preservation of the Work;**
3. **except for Work directed to be performed prior to the effective date of termination stated in the notice, terminate all existing subcontracts and purchase orders and enter into no further subcontracts and purchase orders; and**
4. **provide a detailed inventory to the Owner that indicates the value, nature, and description of all material, labor, and equipment supplied as of the date of termination."**

ARTICLE 18 – MISCELLANEOUS

SC 18.09 Add the following new paragraph after Paragraph 18.08:

Tribal Sovereignty. No provision of this Agreement will be construed by any of the signatories as abridging or debilitating any sovereign powers of the Tribe; affecting the trust-beneficiary relationship between the Secretary of the Interior, Tribe, and

Copyright © 2013 National Society of Professional Engineers, American Council of Engineering Companies, and American Society of Civil Engineers. All rights reserved.

Indian landowner(s); or interfering with the government-to-government relationship between the United States and the Tribe.

SC 18.10 Add the following new paragraph after Paragraph 18.09:

Time for Completion and Liquidated Damages:

A. It is hereby understood and mutually agreed, by and between Contractor and Owner, that the date of beginning and the time for completion as specified in the Agreement of the work to be done hereunder are essential conditions of this Contract; and it is further mutually understood and agreed that the Work embraced in this Agreement shall be commenced on a date to be specified in the Notice to Proceed.

B. Contractor agrees that said Work shall be prosecuted regularly, diligently and uninterruptedly at such rate of progress as will insure full completion thereof within the time specified. It is expressly understood and agreed, by and between Contractor and Owner, that the time for the completion of the Work described herein is a reasonable time for the completion of the same, taking into consideration the average climatic range and conditions in this locality.

C. If said Contractor shall neglect, fail or refuse to complete the Work within the time herein specified, or any proper extension thereof granted by Owner, then the Contractor does hereby agree to pay to Owner the amount specified in the Agreement, not as a penalty but as Liquidated Damages for such breach of Agreement, for each and every calendar day that Contractor shall be in default after the time stipulated in the Agreement for completing the Work.

D. The said amount is fixed and agreed upon by and between Contractor and Owner because of the impracticality and extreme difficulty of fixing and ascertaining the actual damages Owner would in event sustain, and said amount shall be retained from time to time by the Owner from current periodical estimates.

SC 19 Add Article 19 titled

"FEDERAL REQUIREMENTS"

SC 19.01 Add the following language as Paragraph 19.01 with the title

"Agency Not a Party":

A. This Contract is expected to be funded in part with funds provided by Agency. Neither Agency, nor any of its departments, entities, or employees is a party to this Contract.

SC 19.02 Add the following sections after Article 19.01 with the title

"Contract Approval":

A. Owner and Contractor will furnish Owner's attorney such evidence as required so that Owner's attorney can complete and execute the following "Certificate of Owner's Attorney" (Exhibit I of RUS Bulletin 1780-26) before Owner submits the executed Contract Documents to Agency for approval.

B. Concurrence by Agency in the award of the Contract is required before the Contract is effective.

SC 19.03 Add the following language after Article 19.02.B with the title

Copyright © 2013 National Society of Professional Engineers, American Council of Engineering Companies, and American Society of Civil Engineers. All rights reserved.

"Conflict of Interest":

A. Contractor may not knowingly contract with a supplier or manufacturer if the individual or entity who prepared the plans and specifications has a corporate or financial affiliation with the supplier or manufacturer. Owner's officers, employees, or agents shall not engage in the award or administration of this Contract if a conflict of interest, real or apparent, would be involved. Such a conflict would arise when: (i) the employee, officer or agent; (ii) any member of their immediate family; (iii) their partner or (iv) an organization that employs, or is about to employ, any of the above, has a financial interest or other interest in or a tangible personal benefit from the Contractor. Owner's officers, employees, or agents shall neither solicit nor accept gratuities, favors or anything of monetary value from Contractor or subcontractors.

SC 19.04 Add the following language after Article 19.03.A with the title

"Gratuities":

A. If Owner finds after a notice and hearing that Contractor, or any of Contractor's agents or representatives, offered or gave gratuities (in the form of entertainment, gifts, or otherwise) to any official, employee, or agent of Owner or Agency in an attempt to secure this Contract or favorable treatment in awarding, amending, or making any determinations related to the performance of this Contract, Owner may, by written notice to Contractor, terminate this Contract. Owner may also pursue other rights and remedies that the law or this Contract provides. However, the existence of the facts on which Owner bases such findings shall be an issue and may be reviewed in proceedings under the dispute resolution provisions of this Contract.

B. In the event this Contract is terminated as provided in paragraph 19.04.A, Owner may pursue the same remedies against Contractor as it could pursue in the event of a breach of this Contract by Contractor. As a penalty, in addition to any other damages to which it may be entitled by law, Owner may pursue exemplary damages in an amount (as determined by Owner) which shall not be less than three nor more than ten times the costs Contractor incurs in providing any such gratuities to any such officer or employee.

SC 19.05 Add the following language after Article 19.04.B with the title

"**Small, Minority and Women's Businesses**":

A. Contracting with small and minority businesses, women's business enterprises, and labor surplus area firms. If Contractor intends to let any subcontracts for a portion of the work, Contractor must take all necessary affirmative steps to assure that minority businesses, women's business enterprises, and labor surplus area firms are used when possible. Affirmative steps must include:

1. Placing qualified small and minority businesses and women's business enterprises on solicitation lists;

2. Assuring that small and minority businesses, and women's business enterprises are solicited whenever they are potential sources;

Copyright © 2013 National Society of Professional Engineers, American Council of Engineering Companies, and American Society of Civil Engineers. All rights reserved.

3. **Dividing total requirements, when economically feasible, into smaller tasks or quantities to permit maximum participation by small and minority businesses, and women's business enterprises;**
4. **Establishing delivery schedules, where the requirement permits, which encourage participation by small and minority businesses, and women's business enterprises;**
5. **Using the services and assistance, as appropriate, of such organizations as the Small Business Administration and the Minority Business Development Agency of the Department of Commerce; and**

SC 19.06 Add the following after Article 19.05.A.(5) with the title

"Anti-Kickback":

Contractor shall comply with the Copeland Anti-Kickback Act (40 U.S.C 3145) as supplemented by Department of Labor regulations (29 CFR Part 3, "Contractors and Subcontractors on Public Buildings or Public Work Financed in Whole or in Part by Loans or Grants from the United States"). The Act provides that Contractor or subcontractor must be prohibited from inducing, by any means, any person employed in the construction, completion, or repair of public work, to give up any part of the compensation to which he or she is otherwise entitled. Owner shall report all suspected or reported violations to Agency.

SC 19.07 Add the following after Article 19.06.A with the title

"Clean Air Act (42 U.S.C. 7401- 7671q.) and the Federal Water Pollution Control Act (33 U.S.C. 1251-1387), as amended":

A. **Contractor to agree to comply with all applicable standards, orders or regulations issued pursuant to the Clean Air Act (42 U.S.C. 7401-7671q) and the Federal Water Pollution Control Act as amended (33 U.S.C. 1251-1387). Violations must be reported to the Federal awarding agency and the Regional Office of the Environmental Protection Agency (EPA).**

SC 19.08 Add the following after Article 19.07.A with the title

"Equal Employment Opportunity":

A. **The Contract is considered a federally assisted construction contract. Except as otherwise provided under 41 CFR Part 60, all contracts that meet the definition of "federally assisted construction contract" in 41 CFR Part 60-1.3 must include the equal opportunity clause provided under 41 CFR 60-1.4(b), in accordance with Executive Order 11246, "Equal Employment Opportunity" (30 FR 12319, 12935, 3 CFR Part, 1964-1965 Comp., p. 339), as amended by Executive Order 11375, "Amending Executive Order 11246 Relating to Equal Employment Opportunity," and implementing regulations at 41 CFR part 60, "Office of Federal Contract Compliance Programs, Equal Employment Opportunity, Department of Labor."**

SC 19.09 Add the following after Article 19.08.A with the title

"Byrd Anti-Lobbying Amendment (31 U.S.C. 1352):

Copyright © 2013 National Society of Professional Engineers, American Council of Engineering Companies, and American Society of Civil Engineers. All rights reserved.

A. Contractors that apply or bid for an award exceeding $100,000 must file the required certification (RD Instruction 1940-Q, Exhibit A-1). The Contractor certifies to the Owner and every subcontractor certifies to the Contractor that it will not and has not used Federal appropriated funds to pay any person or organization for influencing or attempting to influence an officer or employee of any agency, a member of Congress, officer or employee of Congress, or an employee of a member of Congress in connection with obtaining the Contract if it is covered by 31 U.S.C. 1352. The Contractor and every subcontractor must also disclose any lobbying with non-Federal funds that takes place in connection with obtaining any Federal award. Such disclosures are forwarded from tier to tier up to the Owner. Necessary certification and disclosure forms shall be provided by Owner.

SC 19.10 Add the following after Article 19.09.A with the title

"Environmental Requirements":

A. When constructing a Project involving trenching and/or other related earth excavations, Contractor shall comply with the following environmental conditions:

B. Wetlands – When disposing of excess, spoil, or other construction materials on public or private property, Contractor shall not fill in or otherwise convert wetlands.

C. Floodplains –When disposing of excess, spoil, or other construction materials on public or private property, Contractor shall not fill in or otherwise convert 100-year floodplain areas (Standard Flood Hazard Area) delineated on the latest Federal Emergency Management Agency Floodplain Maps, or other appropriate maps, e.g., alluvial soils on NRCS Soil Survey Maps.

D. Historic Preservation – Any excavation by Contractor that uncovers an historical or archaeological artifact or human remains shall be immediately reported to Owner and a representative of Agency. Construction shall be temporarily halted pending the notification process and further directions issued by Agency after consultation with the State Historic Preservation Officer (SHPO).

E. Endangered Species – Contractor shall comply with the Endangered Species Act, which provides for the protection of endangered and/or threatened species and critical habitat. Should any evidence of the presence of endangered and/or threatened species or their critical habitat be brought to the attention of Contractor, Contractor will immediately report this evidence to Owner and a representative of Agency. Construction shall be temporarily halted pending the notification process and further directions issued by Agency after consultation with the U.S. Fish and Wildlife Service.

F. Mitigation Measures – The following environmental mitigation measures are required on this Project: Incorporation of a forested buffer between the site and the wetland boundary.

SC 19.11 Add the following after Article 19.10.E. with the title

"Contract Work Hours and Safety Standards Act (40 U.S.C. 3701-3708)":

Copyright © 2013 National Society of Professional Engineers, American Council of Engineering Companies, and American Society of Civil Engineers. All rights reserved.

A. Where applicable, for contracts awarded by the Owner in excess of $100,000 that involve the employment of mechanics or laborers, the Contractor must comply with 40 U.S.C. 3702 and 3704, as supplemented by Department of Labor regulations (29 CFR Part 5). Under 40 U.S.C. 3702 of the Act, the Contractor must compute the wages of every mechanic and laborer on the basis of a standard work week of 40 hours. Work in excess of the standard work week is permissible provided that the worker is compensated at a rate of not less than one and a half times the basic rate of pay for all hours worked in excess of 40 hours in the work week. The requirements of 40 U.S.C. 3704 are applicable to construction work and provide that no laborer or mechanic must be required to work in surroundings or under working conditions which are unsanitary, hazardous or dangerous. These requirements do not apply to the purchases of supplies or materials or articles ordinarily available on the open market, or contracts for transportation or transmission of intelligence.

SC 19.12 Add the following after Article 19.11.A. with the title

"Debarment and Suspension (Executive Orders 12549 and 12689)":

B. A contract award (see 2 CFR 180.220) must not be made to parties listed on the government wide exclusions in the System for Award Management (SAM), in accordance with the OMB guidelines at 2 CFR 180 that implement Executive Orders 12549 (3 CFR part 1986 Comp., p. 189) and 12689 (3 CFR part 1989 Comp., p. 235), "Debarment and Suspension." SAM Exclusions contains the names of parties debarred, suspended, or otherwise excluded by agencies, as well as parties declared ineligible under statutory or regulatory authority other than Executive Order 12549.

SC 19.13 Add the following after Article 19.12.A. with the title

"Procurement of recovered materials":

The Contractor must comply with 2 CFR Part 200.322, "Procurement of recovered materials."

Copyright © 2013 National Society of Professional Engineers, American Council of Engineering Companies, and American Society of Civil Engineers. All rights reserved.

TAB E

Special Provisions

SPECIAL PROVISIONS

DESCRIPTION:

These Special Provisions amend or supplement the Division II Construction Details (Technical Provisions) and Division III Materials Section in the State of Connecticut Department of Transportation (CTDOT) Standard Specifications for Roads, Bridges and Incidental Construction, Form 818, dated 2020 through Supplemental Specifications dated July 2020, which are incorporated herein and are referred to herein after at "Form 818." Only the Form 818 Division II Construction Details and Division III Materials Section are incorporated herein.

These Standard Specifications –Form 818, in a searchable document format, may be accessed on the Department's internet site: Click on "Doing Business with CTDOT" under "Publications" choose "Specifications for Roads, Bridges, Facilities & Incidental Construction" from the list, then click on "Form 818"at: https://portal.ct.gov/DOT

GENERAL:

Special Provision amendments or supplements that apply throughout Form 818 Division Details (Technical Provisions) are outlined below:

1. Replace the word "State" and the word "Department, wherever they appear, with the word "City" throughout Form 818.
2. Method of Measurement: Work items for this lump sum project will not be measured separately for payment unless additions, deletions or modifications to the Work are ordered by the Owner issued Change Order.
3. Basis for Payment: Work items for this lump sum project will not be paid for separately unless additions, deletions or modifications to the Work are ordered by the Owner issued Change Order. Progress payments will be made against the Contract Lump Sum for the entire project using an approved Schedule of Values.

RELEVANT SECTIONS:

The following is a list of relevant sections of Form 818 that apply to this project. Note: This list is provided as reference only, meaning that it does not exclusively limit the scope of work for this project.

Section	Description
2.02	Roadway Excavation, Formation of Embankment and Disposal of Surplus Material
2.09	Subgrade
2.12	Subbase
2.13	Granular Fill
2.19	Sedimentation Control System
3.04	Processed Aggregate Base
3.05	Processed Agggregate
4.06	Bituminous Concrete
6.02	Reinforcing Steel

9.10	Metal Beam Rail
9.11	Metal Beam Rail Anchorage
9.13	Chain Link Fence
9.21	Concrete Sidewalks and Ramps
9.71	Maintenance & Protection of Traffic
9.75	Mobilization
12.09	Painted Pavement Markings
12.20	Construction Signs

SUBMITTALS:

The Contractor shall submit (3) copies of each shop drawing/product data to the City or it's agent for approval, prior to construction. The City or its agent will endeavor to respond with their approval and/or review comments within a (2) week period of their receipt of said submittals. The Contractor shall make submittals to include but not limited to the sections of the Form 818 above and per the special provisions hereon.

COORDINATION OF WORK:

The Contractor shall coordinate with the City and its agents accordingly.

SCHEDULE:

The contract time for this project is sixty (60) calendar days, starting on the Notice to Proceed date, and does not allow for a winter shutdown period. The intended project schedule is as follows:

Bid Closed:	June 8, 2021
Notice of Award:	June 21, 2021 (tentative)
Contract Signing:	July 19, 2021 (tentative)
Notice to Proceed:	July 26, 2021 (tentative)
Substantial Completion:	September 23, 2021(tentative)

LIQUIDATED DAMAGES:

The Contractor is hereby notified that liquidated damages in the amount of five hundred dollars ($500.00) per consecutive calendar day apply to this project in order to help ensure a timely completion.

PREVAILING WAGE RATES:

The Contractor is hereby notified that the bid shall be submitted without consideration of prevailing wage rates if all work is less than $100,000.

UTILITY COORDINATION:

The Contractor is hereby notified that if existing overhead utilities are planned for temporary and/or permanent relocation to support this project, including Eversource Energy (CL&P), Frontier Communications of Connecticut, Comcast (Cable) or any other overhead utility. The Contractor is responsible for coordinating the necessary utility relocations or modifications to complete the work.

MAINTENANCE & PROTECTION OF TRAFFIC:

The Contractor shall be responsible for furnishing, installing and maintaining all temporary pedestrian & traffic barriers and construction signage as required for the duration of the contract period. The Contractor shall coordinate the location of these barriers with the City of New London or their agent. There shall be no separate measurement and payment for maintenance & protection of traffic.

PORTABLE CHEMICAL TOILET FACILITY:

The Contractor shall furnish one (1) portable chemical toilet for the entire duration of the contract time period to support this construction project. There shall be no separate measurement and payment for portable chemical toilet facilities.

CONSTRUCTION STAKING:

The Contractor is hereby notified that prior to construction Barton & Loguidice, LLC. shall provide the contractor with horizontal and vertical control in support of the project. The Contractor is responsible for all construction staking resulting from construction activities. There shall be no separate measurement and payment for additional construction staking.

INSPECTION:

The Contractor is hereby notified that the City's agent, Barton & Loguidice, LLC., will perform construction inspection to support this project.

TESTING:

The Contractor is hereby notified that the City's agent, Barton & Loguidice, LLC. shall coordinate and perform all in place soils density tests as deemed necessary to ensure proper soils compaction. In addition, the Contractor must comply with the requirements of the Contract Special Provisions, "Minimum Schedule for Acceptance Testing" and the Minimum Schedule for Acceptance Testing and the "Minimum Schedule for Assurance Testing" from the CT DOT Division of Materials Testing (DMT). Contractor is responsible for the procurement of an independent qualified testing agency to perform on-site concrete testing as refered in the technical specifications. The Contractor to coordinate the procurement with the Inspector or Engineer to schedule a testing technician.

PERMITS:

The Contractor is hereby notified that the City of New London will waive all local municipal permit fees for this project. It is the responsibility of the contractor to obtain all local and other permits required for this project.

CALL-BEFORE- YOU- DIG (CBYD):

The Contractor is hereby notified that they shall contact Call-Before-You-Dig (CBYD) 1-800-922-4455 www.cbyd.com and obtain authorization prior to start of work as required by law.

TAB F

Technical Specifications

SECTION 03 30 00
CAST-IN-PLACE CONCRETE

PART 1 - GENERAL

1.01 DESCRIPTION OF WORK

A. Work Included: Provide labor, materials and equipment necessary to complete the work of this Section, including but not limited to the following:

1. Cast-in-place concrete, including formwork, reinforcement, concrete materials, mixture design, placement procedures and finishes for the following applications:
   a. Footings.
   b. Cast-in-place site concrete including curbs and sidewalks.

1.02 RELATED WORK

1.03 SUBMITTALS

A. Product Data: For each type of product indicated.

B. Design Mixtures: For each concrete mixture. Submit alternate design mixtures when characteristics of materials, Project conditions, weather, test results, or other circumstances warrant adjustments.

1. Indicate amounts of mixing water to be withheld for later addition at Project site.
2. Indicate amount of fly ash in the mix.

C. Steel Reinforcement Shop Drawings: Placing drawings that detail fabrication, bending, and placement. Include bar sizes, lengths, material, grade, bar schedules, stirrup spacing, bent bar diagrams, bar arrangement, splices and laps, mechanical connections, tie spacing, hoop spacing, and supports for concrete reinforcement. Comply with ACI Manual of Standard Practice for Detailing Reinforced Concrete Structures.

1. Blockouts for Architectural Joint Systems: Indicate blockouts and coordination with architectural joint systems

D. Anchor Bolt Location: Indicate compliance with approved shop drawings.

E. Material Test Reports: For the following, from a qualified testing agency, indicating compliance with requirements:

1. Aggregates.

F. Material Certificates: For each of the following, signed by manufacturers:

1. Cementitious materials.
2. Admixtures.
3. Form materials and form-release agents.
4. Steel reinforcement and accessories.
5. Waterstops.
6. Curing compounds.
7. Floor and slab treatments.
8. Bonding agents.
9. Joint-filler strips.

G. Field quality-control test and inspection reports.

QUALITY ASSURANCE

H. Manufacturer Qualifications: A firm experienced in manufacturing ready-mixed concrete products and that complies with ASTM C 94 requirements for production facilities and equipment.

I. Testing Agency Qualifications: An independent agency, acceptable to authorities having jurisdiction, qualified according to ASTM C 1077 and ASTM E 329 for testing indicated, as documented according to ASTM E 548.

1. Personnel conducting field tests shall be qualified as ACI Concrete Field Testing Technician, Grade 1, according to ACI CP-01 or an equivalent certification program.
2. Personnel performing laboratory tests shall be ACI-certified Concrete Strength Testing Technician and Concrete Laboratory Testing Technician - Grade I. Testing Agency laboratory supervisor shall be an ACI-certified Concrete Laboratory Testing Technician - Grade II.

J. Source Limitations: Obtain each type or class of cementitious material of the same brand from the same manufacturer's plant, obtain aggregate from one source, and obtain admixtures through one source from a single manufacturer.

K. Welding: No welding of reinforcing will be allowed.

L. ACI Publications: Comply with the following unless modified by requirements in the Contract Documents:

1. ACI 301, "Specification for Structural Concrete."
2. ACI 117, "Specifications for Tolerances for Concrete Construction and Materials."
3. ACI318, “Building Code Requirements for Reinforced Concrete”.
4. Concrete Reinforcing Steel Institute (CRSI), “Manual of Standard Practice”.
5. ACI 304, “Recommended Practice for Measuring, Mixing Transporting, and Placing Concrete”.
6. ACI 305, “Hot Weather Concreting”.
7. ACI 306, “Cold Weather Concreting”.

8. ACI 315, "Details and Detailing of Concrete Reinforcement".
9. ACI 347, "Recommended Practice for Concrete Formwork".
10. ACI 211, "Recommended Practice for Selecting Proportions for Normal and Heavyweight Concrete".
11. ACI 214, "Recommended Practice for Evaluation of Compressive Test Results of Concrete".
12. ACI 302, "Guide for Concrete Floor and Slab Construction".
13. ACI 201, "Guide to Durable Concrete".

M. Concrete Testing Service: Engage a qualified independent testing agency to perform material evaluation tests and to design concrete mixtures.

N. Pre-installation Conference: Conduct conference at Project site to comply with requirements in Division 01.

1. Before submitting design mixtures, review concrete design mixture and examine procedures for ensuring quality of concrete materials. Require representatives of each entity directly concerned with cast-in-place concrete to attend, including the following:

   a. Contractor's superintendent.
   b. Independent testing agency responsible for concrete design mixtures.
   c. Ready-mix concrete manufacturer.
   d. Concrete subcontractor.

2. Review testing and inspecting agency procedures for field quality control, concrete finishes and finishing, cold- and hot-weather concreting procedures, curing procedures, construction contraction and isolation joints, and joint-filler strips, semi rigid joint fillers, forms and form removal limitations, shoring and reshoring procedures, vapor-retarder installation, anchor rod and anchorage device installation tolerances, steel reinforcement installation, floor and slab flatness and levelness measurement, concrete repair procedures, and concrete protection.

1.04 DELIVERY, STORAGE, AND HANDLING

A. Steel Reinforcement: Deliver, store, and handle steel reinforcement to prevent bending and damage. Avoid damaging coatings on steel reinforcement.

1.05 PROJECT CONDITIONS

A. Protection of footings against freezing: Cover completed work at footing level with sufficient temporary or permanent cover as required to protect footings and adjacent subgrade against possibility of freezing, maintain cover for time period as necessary.

B. Protect adjacent finish materials against spatter during concrete placement.

1.06 STORAGE OF MATERIALS

A. Metal Reinforcement: Store on wood mud sills, off ground. Keep clean of dirt. Provide proper drainage of groundwater.

PART 2 - PRODUCTS

2.01 CONCRETE MATERIALS

A. Cement: shall be American-made Portland Cement, free from water soluble salts or alkalis which will cause efflorescence on exposed surfaces. Portland Cement shall be Type II, ASTM C150. Use only one brand of cement for each type of cement throughout project. Contractor shall be responsible for whatever steps are necessary to insure that no visual variations in color will result in exposed concrete and shall place on order and secure in advance a sufficient quantity of this cement to complete concrete work specified herein.

1. Fly Ash: ASTM C 618 Standard Specification for Fly Ash and Raw or Calcined Natural Pozzolan for Users as a Mineral Admixture in Portland Cement Concrete. ASTM C 311, Standard Methods of Sampling and Testing Fly Ash and Natural Pozzolans for Use as a Mineral Admixture in Portland Cement Concrete.
2. Ground Granulated Blast-Furnace Slag: ASTM C 989, Ground Granulated Blast-Furnace Slag for Use in Concrete Mortars. Grade 100 or 120. Standard Practice ACI 226.R1, Ground Granulated Blast-Furnace Slag as a Cementitious Constituent in Concrete.

B. Normal weight Fine Aggregate: shall be washed, inert, natural sand conforming to ASTM C33 and following additional requirements:

Sieve	Retained Percent
#4	0 - 5
#16	25 - 40
#50	70 - 87
#100	93 - 97

Fineness Modulus	2.80 (Plus/Minus 0.20)
Organic	Plate 2 maximum
Silt	2.0 percent maximum
Mortar Strength	100 percent minimum compression ratio
Soundness	5 percent maximum loss, magnesium sulfate, five cycles

C. Normal weight Coarse Aggregate: shall be well graded crushed stone or washed gravel conforming to ASTM C33 and the following additional requirements:

Designated Size (inches)	3	2	1-1/2	1	3/4	1/2	3/8

F.M.(+/-0.20)	7.95	7.45	7.20	6.95	6.70	6.10	4.50

Organic	Plate 1 maximum
Silt	1.0 percent maximum
Soundness	5 percent maximum loss, magnesium sulfate, five cycles

Maximum designated sizes for normal weight coarse aggregate to be used in concrete sections shall be as noted below, except that sizes shall also be chosen in conjunction with required clearances.

1. One and one-half inches for sections over ten inches in thickness.
2. One inch for sections more than eight and up to ten inches in thickness.
3. Three-quarter inch for sections more than three and up to eight inches in thickness.

D. Water: Shall be from approved source, potable, clean and free from oils, acids, alkali, organic matter and other deleterious material.

F. Admixtures:

1. Water-reducing agent: ASTM C 494, Type A, and containing not more than 0.1 percent chloride ions by weight of cement.

   a. "WRDA" - W.R. Grace & Co.
   b. "PDA25" - Protex Industries, Inc.
   c. "Pozzolith 344H" - Master Builder's Co.
   d. Note: Water-reducing agent shall be by same manufacturer as air-entraining agent.

2. Air-entraining agent: ASTM C 260, certified by manufacturer to be compatible with other required admixtures.

   a. "DAREX AEA" - W.R. Grace & Co.
   b. "PROTEX AEA" - Protex Industries
   c. "MB-VR" or "MB-AE" - Master Builder's Co.

3. Superplasticizer: High-range water-reducer conforming to ASTM C494, Type F or Type G.

4. Water-Reducing; Non-Chloride Accelerator Admixture: ASTM C 494, Type C or E, and containing not more than 0.1 percent chloride ions by weight of cement.

   Products: Provide one of the following:

   a. “Accelguard 80”, Euclid Chemical Co.
   b. “Pozzotec 20”, Master Builders
   c. “Daraset Accelerator”, W. R. Grace

5. Water-Reducing, Retarding Admixture: ASTM C 494, Type D., and containing not more than 0.1 percent chloride ions by weight of cement.

   Products: Provide one of the following:

   a. "Pozzolith 100XR", Master Builders
   b. "Eucon Retarder 75", Euclid Chemical Co.
   c. "Daratard", W. R. Grace

6. Prohibited Admixtures: Calcium chloride thyocyanates of admixtures containing more than 0l1 percent chloride ions are not permitted.

2.02 CONCRETE MIXTURES

A. The Contractor shall recommend, on the basis of trial mixes and strength curves specified below, design mixes for each type and strength of concrete. The Testing Agency will verify that the proposed mix designs conform to all specification requirements.

B. Sufficient materials for concrete mix design shall be furnished by Contractor not less than five weeks before use. Duplicate small samples plainly and neatly labeled with source, where proposed to be used, date, and name of collector shall be provided and presented to Testing Agency for permanent reference.

C. Mixes shall be designed in accordance with "Method 1" of ACI 301, and the requirements of this Section. All concrete is normal weight unless specifically designated otherwise; air-dry weight not to exceed 150 lbs. per cubic foot.

D. Limiting values shown below apply for specific strengths of concrete with coarse aggregates less than one and one-half inches unless noted otherwise in TABLE A below.

TABLE A

Use compressive strengths of concrete as shown on the drawings and classes of concrete generally as tabulated below.

1. Class III: All exterior concrete., including footings but not sidewalks.
2. Class VII: Concrete site work, including curbs and sidewalks.

.

Class Requirements	Strength @ 28 Days	Maximum Water/Cement	Slump	Special
I	3000 PSI	0.54	4"	Note (1)

II	4000 PSI	0.45	3"	Note (3) Note (4) Note (6)
III	4000 PSI	0.54	4"	Note (1) Note (2)
IV	3500 PSI	0.45	3"	Note (1) Note (3) Note (4) Note (6)
V	4000 PSI	0.40	3"	Note (1) Note (2) Note (3)
VI	4000 PSI	0.45	3"	Note (1) Note (3) Note (4)
VII	4500 PSI	0.45	4"	Note (1) Note (2)
VIII	4500 PSI	0.45	4"	Note (1) Note (2) Note (5)
IX	4000 PSI	0.45	4"	Note (1) Note (2) Note (3)

Table A (Continued)

Slump values are those which will be measured at the point of discharge and prior to the addition of super-plasticizer.

Note (1) Use water reducing admixture

Note (2) Use air-entraining admixture

Note (3) High range water reducing admixture (super-plasticizer) may be used to increase slump to a maximum value of 8".

Note (4) Limit air content to 3%.

Note (5) Pigmented concrete with stamped finish, Color to be selected by Landscape Architect.

Note (6) Concrete Waterproofing Admixture.

E. In all slabs and footings exposed to weather, all concrete shall contain the approved air-entraining admixture as per manufacturer's written instructions, to provide entrained air, by volume, in the cured concrete within 4.5 to 6.5 percent.

F. Water-Reducing Admixture - The approved water-reducing admixture shall be used in all concrete, in accordance with manufacturer's written instructions.

G. Concrete slabs, including slabs on grade, shall have a maximum water cement ratio of 0.45.

H. The approved superplasticizer shall be used in all concrete slabs, including slabs on grade.

I. Water content and cement content of concrete to be used in work shall be based on curve showing relation between water content, cement content, and 7 and 28 day compressive strengths of concrete made using proposed materials. Curves shall be determined by four or more points, each representing an average of at least three test specimens at each age, and shall have range of values sufficient to yield desired data, including all compressive strengths required by Contract Documents, without extrapolation. Design mix of concrete to be used in work, as determined from curve, shall correspond to following test strengths (TABLE B) obtained in laboratory trial mixtures, but in no case shall resulting mix conflict with limiting values as specified in TABLE A.

TABLE B

Minimum Strength of Lab Trial Mixes (psi)

Design Strength	Trial Mix Strength 7-days	28-days
3000	2700	3750
3500	3150	4375
4000	3800	5000
5000	4750	5750
6000	5700	6800

J . Any deviation from approved mix design, which Contractor deems desirable under certain project conditions, will not be allowed without written approval of the Engineer. Cost of any additional testing by Testing Agency associated therewith shall be paid for by Contractor.

K. Evaluation and Acceptance of Concrete

1. The evaluation and acceptance of concrete shall be governed by "Building Code Requirements for Reinforced Concrete" (ACI 318).

2. In general, the strength level of the concrete will be considered satisfactory if the averages of all sets of three consecutively tested concrete specimens equal or exceed the required

strength and no individual strength test result falls below the required strength by more than 500 PSI.

3. If the above requirements are not met, and if the likelihood of low strength concrete is confirmed, additional tests shall be performed at the Contractor's expense as outlined in Chapter 4 of the ACI 318 Code or other action appropriate to the circumstances and as determined by the Architect/Engineer shall be taken to assure the load-carrying capacity of the structure under design loads.

2.03 FORM MATERIALS

A. Construct formwork to shapes, lines, and dimensions required, plumb and straight, secured and braced sufficiently rigid to prevent deformation under load, and sufficiently tight to prevent leakage, all in conformance with ACI Standard 347, "Recommended Practice for Concrete Formwork".

B. Formwork for exposed concrete shall be medium-density plastic overlaid plywood, 5/8" minimum thickness; for concealed concrete shall be "Plyform" plywood, 5/8" minimum thickness.

C. Chamfer Strips: Half-inch, 45-degree poplar wood strips, nailed six inches on center, and installed in inside corners of all forms for all exterior corners and edges of permanently exposed concrete, unless otherwise directed by the Engineer.

D. Form Ties and Spreaders: Richmond Tyscrus by Richmond Screw Anchor Co.; Superior-ties by Superior Concrete Accessories, Ind.; or Sure-Grip Ties by Dayton Sure-Grip and Shore Co. Wire ties shall not be used. Ties for foundation walls shall be snap-ties or type specified above with removal cones and shall incorporate water seal washer. Ties shall be arranged in a symmetrical manner.

E. Form Release Agent: Non-staining and non-emulsifiable type, or equal approved by the Engineer. Form release agent shall be biodegradable and shall not impart any stain to concrete nor interfere with adherence of any material to be applied to concrete surfaces.

2.04 REINFORCEMENT AND ACCESSORIES

A. Reinforcing Steel Bars: shall be newly rolled billet steel conforming to ASTM A615 Grade 60. Bars shall be bent cold.

B. Welded Wire Fabric: shall conform to ASTM A185.

C. All embedded items shall be hot-dip galvanized after fabrication in accordance with ASTM A123.

All hot-dip galvanized steel shall be inspected for compliance with ASTM A123 and shall be marked with a stamp that indicates the number of ounces of zinc per square foot of steel. A notarized Certificate of Compliance with all of the above shall be required from the galvanizer.

D. Reinforcement Accessories: shall conform to Product Standard PS7-766, National Bureau of Standards, Department of Commerce, Class C, as produced by Superior Concrete Accessories, Inc.; Dayton Sure-Grip Co.; or R.K.L. Building Specialties Co., Inc. Reinforcement accessories shall include spacers, chairs, ties, slab bolsters, clips, chair bars, and other devices for properly assembling, placing, spacing, supporting, and fastening reinforcement.

E. Tie wire shall be annealed wire of sufficient strength for intended purpose, but not less than No. 18 gage. Metal supports shall be of such type as not to penetrate surface of formwork and show through surface of concrete. Accessories touching interior formed surfaces exposed to view shall have not less than 1/8 inch of plastic between metal and concrete surface. Plastic tips shall extend not less than 1/2 inch up on metal legs. Individual and continuous slab bolsters and chairs shall be of type to suit various conditions encountered and must be capable of supporting 300-pound load without damage or permanent distortion.

2.05 MISCELLANEOUS MATERIALS

A. Membrane Curing Compound: shall conform to ASTM C309, Type 1. Product used shall be shown to be compatible with the later application of coatings. Curing compound shall not be used on any floor slab scheduled to receive an adhered floor finish.

B. Chemical Hardener: All exposed concrete slabs shall be hardened with three applications of fluosilicate chemical hardener followed by two applications of clear acrylic concrete sealer by Sonneborn Division, ChemRex Inc. "Lapidolith"; or equal product by W.R. Meadows Co. or Concrete Service Material Company.

C Absorption Cover: Burlap cloth made from jute or kenaf, weighting approximately 9 oz. per sq. yd., complying with AASHTO M 182, Class 2.

D Moisture-Retaining Cover: One of the following, complying with ASTM C 171.

1. Waterproof paper
2. Polyethylene film
3 Polyethylene-coated burlap

E Premoulded Joint Filler: Homex 300 expansion joint filler, ¼" thick by full depth of slab for building slabs, ½" thick by full depth of slab for site work slabs and pavement, as manufactured by Homasote Company. Equivalent non-bituminous material may be used if approved by the Architect/Engineer.

F. Compressible Backup Material: Closed cell polyethylene foam rod equivalent to Ethafoam sealant backer rod, manufactured by Dow Chemical Company.

PART 3 - EXECUTION

3.01 INSPECTION

A. Examine all work prepared by others to receive work of this Section and report any defects affecting installation to the Contractor for correction. Commencement of work will be construed as complete acceptance of preparatory work by others.

3.02 HANDLING, STORAGE, AND PROTECTION OF MATERIALS

A. Handle and store materials separately in such manner as to prevent intrusion of foreign matter, segregation, or deterioration. Do not use foreign materials or those containing ice. Remove improper and rejected materials immediately from point of use. Cover materials, including steel reinforcement and accessories, during construction period. Stockpile concrete constituents properly to assure uniformity throughout project.

3.03 FORMWORK

A. Design, erect, shore, brace, and maintain formwork, according to ACI 301, to support vertical, lateral, static, and dynamic loads, and construction loads that might be applied, until structure can support such loads.

B. Construct formwork so concrete members and structures are of size, shape, alignment, elevation, and position indicated, within tolerance limits of ACI 117.

C. Construct forms tight enough to prevent loss of concrete mortar.

D. Fabricate forms for easy removal without hammering or prying against concrete surfaces. Provide crush or wrecking plates where stripping may damage cast concrete surfaces. Provide top forms for inclined surfaces steeper than 1.5 horizontal to 1 vertical.

1. Install keyways, reglets, recesses, and the like, for easy removal.
2. Do not use rust-stained steel form-facing material.

E. Set edge forms, bulkheads, and intermediate screed strips for slabs to achieve required elevations and slopes in finished concrete surfaces. Provide and secure units to support screed strips; use strike-off templates or compacting-type screeds.

F. Provide temporary openings for cleanouts and inspection ports where interior area of formwork is inaccessible. Close openings with panels tightly fitted to forms and securely braced to prevent loss of concrete mortar. Locate temporary openings in forms at inconspicuous locations.

G. Chamfer exterior corners and edges of permanently exposed concrete.

H. Form openings, chases, offsets, sinkages, keyways, reglets, blocking, screeds, and bulkheads required in the Work. Determine sizes and locations from trades providing such items.

I. Set and maintain formwork to insure complete concrete work within tolerance limits listed in ACI 347 latest edition, "Recommended Practice for Concrete Formwork", and with following additional requirements:

3. Variations in cross-sectional dimensions of footings and in thickness of slabs and walls.

Minus	1/8 inch
Plus	1/4 inch

J. For a minimum of one hour prior to concrete placement, wet forms continuously with water to swell forms in order to prevent leakage of concrete matrix and to minimize absorption of concrete matrix water by form materials. This requirement may be waived for those specific cases where the Engineer deems it unnecessary or impractical. Care must be exercised to prevent a build-up of water at base of forms.

K. Before form materials can be re-used, surfaces that will be in contact with freshly cast concrete shall be thoroughly cleaned, damaged areas repaired and projecting nails withdrawn. Re-use of form material shall be subject to approval by the Engineer. Follow form liner manufacturer recommendation on reuse of form liner.

L. Coat contact surfaces of forms with form-release agent, according to manufacturer's written instructions, before placing reinforcement.

3.04 PLACING OF REINFORCEMENT

A. Reinforcement shall be placed in accordance with requirements of CRSI 93, "Recommended Practice for Placing Reinforcing Bars" and CRSI 93, "Recommended Practice for Placing Bar Supports" and with further requirements below.

B. Reinforcement shall be accurately placed in accordance with Contract Documents and shall be firmly secured in position by wire ties, chairs, spacers, and hangers, each of type approved by the Engineer.

C. Bending, welding or cutting reinforcement in field in any manner other than as shown on Drawings, is prohibited, unless specific approval for each case is given by the Engineer.

D. Reinforcement shall be continuous through construction joints unless otherwise indicated on Drawings.

E. Reinforcement shall be spliced only in accordance with requirements of Contract Documents or as otherwise specifically approved by the Engineer. Splices of reinforcement at points of maximum stress shall generally be avoided. Welded wire fabric shall lap six inches or one space plus two inches whichever is larger, and shall be wired together.

F. At time concrete is placed, reinforcement shall be free of excessive rust, scale, or other coatings that will destroy or reduce bond requirements. Reinforcement expected to be exposed to weather for a considerable length of time shall be painted with a heavy coat of cement grout. Protect stored materials so as not to end or distort bars in any way. Bars that become damaged will be rejected.

E. Before concrete is cast, check all reinforcement after it is placed to insure that reinforcement conforms to Contract Documents and approved Shop Drawings. Such checking shall be done only by qualified experienced personnel. In addition, the Engineer shall be notified at least 36 hours prior to concrete placement and given opportunity to inspect completed reinforcement and formwork before concrete placement. Prior approval of Shop Drawings shall in no way limit the Engineer's right to demand modifications or additions to reinforcement or accessories.

3.05 JOINTS

A. Construction and control joints indicated on Drawings are mandatory and shall not be omitted.

B. Joints not indicated or specified shall be placed to least impair strength of structure and shall be subject to approval of the Engineer.

C. Provide keyways at least 1-1/2" deep in construction joints in walls, slabs, and between walls and footings; accepted bulkheads designed for this purpose may be used for slabs.

D. Isolation Joints in Slabs-on-Ground: Construct isolation joints in slabs-on-ground at points of contact between slabs-on-ground and vertical surfaces, such as column pedestals, foundation walls, grade beams, and elsewhere as indicated, using 1/2" thick premoulded joint filler through full thickness of slab.

G. Contraction (Control) Joints on Slabs-on-Ground: Construct contraction joints in slabs-on-ground to form panels of patterns as shown.

3.06 INSTALLATION OF EMBEDDED ITEMS

A. Conform to requirements of ACI 318, paragraph 6.3, "Conduits and Pipes Embedded in Concrete", and as specified below.

B. Install steel sleeves, embedded wall plates and similar items, furnished by other trades, at locations shown on the drawings.

C. Anchor bolts for Pole baseplates shall be installed with templates provided. Vertical alignment and plan locations shall be maintained within one-sixteenth inches of the locations shown on the drawings.

1. Inspection shall be performed by a surveyor licensed in the state the project is located. Certify compliance with shop drawings.

3.07 MIXING, CONSISTENCY, AND DELIVERY OF CONCRETE

A. Concrete shall be ready-mixed, produced by plant acceptable to the Engineer. Hand or site mixing shall not be done. Constituents, including admixtures except certain corrosion inhibitors and superplasticizers, shall be batched at central batch plant. Admixtures shall be premixed in solution form and dispensed as recommended by manufacturer.

B. Central plant and rolling stock equipment and methods shall conform with Truck Mixer and Agitator Standard of Truck Mixer Manufacturer's Bureau of National Ready-Mixed Concrete Association, and Contract Documents. Consistency of concrete at time of deposit shall be as follows:

Portion of Structure	Slump Recommended	Max. Range
Footings and Slabs	4"	3" - 5"

C. Ready mixed concrete shall be transported to site in watertight agitator or mixer trucks loaded not in excess of rated capacities. Discharge at site shall be within one and one-half hours after cement was first introduced into mix. Discard cement not discharged within one and one-half hours and dispose of legally. Concrete with a temperature greater than 85 degrees F. shall not be placed. Central mixed concrete shall be plant mixed a minimum of five minutes. Agitation shall begin immediately after premixed concrete is placed in truck and shall continue without interruption until discharged. Transit mixed concrete shall be mixed at mixing speed for at least ten minutes immediately after charging truck followed by agitation without interruption until discharged. Concrete shall be furnished by a single plant unless accepted by the Engineer in writing.

D. Re-tempering of concrete which has partially hardened, that is, mixing with or without additional cement, aggregates, or water, will not be permitted.

3.08 PLACING CONCRETE

A. Preplacement Inspection: Before placing concrete, inspect and complete formwork installation, reinforcing steel, and items to be embedded or cast-in. Notify other crafts to permit installation of their work, cooperate with other trades in setting such work. Moisten wood forms immediately before placing concrete where form coatings are not used.

B. Remove water and foreign matter from forms and excavations and, except in freezing weather or as otherwise directed, thoroughly wet wood forms just prior to placing concrete. Place no

concrete on frozen soil and provide adequate protection against frost action during freezing weather.

C. Do not place concrete having slump outside of allowable slump range.

E. Transport concrete from mixer to place of final deposit as rapidly as practical by methods which prevent separation of ingredients and displacement of reinforcement, and which avoid re-handling. Deposit no partially hardened concrete. When concrete is conveyed by chutes, equipment shall be of such size and U-shaped design as to insure continuous flow in chute. Flat (coal) chutes shall not be employed. Chutes shall be of metal or metal lines and different portions shall have approximately same slope. Slope shall not be less than 25 degrees nor more than 45 degrees from horizontal and shall be such as to prevent segregation of ingredients. Discharge end of chute shall be provided with baffle plate or spout to prevent segregation. If discharge end of chute is more than five feet above surface of concrete in forms, spout shall be used, and lower and maintained as near surface of deposit as practicable. When operation is intermittent, chute shall discharge into hopper. Chute shall be thoroughly cleaned before and after each run and debris and any water used shall be discharged outside forms. Concrete shall not be allowed to flow horizontally over distances exceeding five feet.

F. Concrete shall be placed in such manner as to prevent segregation, and accumulations of hardened concrete on forms or reinforcement above mass of concrete being placed. To achieve this end, suitable hoppers, spouts with restricted outlets and tremies shall be used as required.

G. During and immediately after depositing, concrete shall be thoroughly compacted by means of internal type mechanical vibrators or other tools, or by spading to produce required quality of finish. Vibration shall be done by experienced operators under close supervision and shall be carried on only enough to produce homogeneity and optimum consolidation without permitting segregation of constituents or "pumping" of air. Vibrators used for normal weight concrete shall operate at speed at not less than 7,000 rpm and be of suitable capacity. Do not use vibrators to move concrete. Vibration shall be supplemented by proper wooden spade puddling to remove included bubbles and honeycomb adjacent to visible surfaces. At least one vibrator shall be on hand for every 10 cubic yards of concrete placed per hour, plus one spare. Vibrators shall be operable and on site prior to starting placement.

H. Vertical lifts shall not exceed 18 inches. Vibrate completely through successive lifts to avoid pour lines. Vibrate first lift thoroughly until top of lift glistens to avoid stone pockets, honeycomb, and segregation.

I. Concrete shall be deposited continuously, and in layers of such thickness that no concrete will be deposited on concrete which has hardened sufficiently to cause formation of seams and planes of weakness within section. If section cannot be placed continuously between planned construction joints, as specified, field joint and additional reinforcement shall be introduced so as to preserve structural continuity. The Engineer shall be notified in any such case.

J. Cold joints, particularly in exposed concrete, including "honeycomb", are unacceptable. If they occur in concrete surfaces exposed to view, the Engineer will require that entire section in which blemish occurs be removed and replaced with new materials at Contractor's expense.

K. Chutes, hoppers, spouts, adjacent work, etc. shall be thoroughly cleaned before and after each run and water and debris shall be discharged outside form.

3.09 FINISHING OF UNFORMED CONCRETE SURFACES

A. Steel Broom Finish (with smooth edging): shall be provided at exterior concrete walks, pavements and steps. Sidewalks shall receive a broom finish perpendicular to the run of the sidewalk.

F. Site curbs shall receive a rubbed and brushed finish.

E. Contractor, at his own expense, shall level depressed spots and grind high spots in concrete surfaces which are in excess of specified tolerances. Leveling materials proposed for providing proper surface shall be approved by the Engineer.

3.10 CURING AND PROTECTION

A. When concrete is placed at or below ambient air temperatures of 40 degrees F. or whenever in opinion of the Engineer, such or lower temperatures are likely to occur within 48 hours after placement of concrete, cold weather concreting procedures, according to ACI 306 and as specified herein, shall be followed. To this end, entire area affected shall be protected by adequate housing or covering, and heating. No salt, chemicals or other foreign materials shall be used in the mix to lower freezing point of concrete.

B. Protect concrete work against injury from heat, cold, and defacement of any nature during construction operations.

C. Concrete shall be treated and protected immediately after concreting or cement finishing is completed, to provide continuous moist curing above 50 degrees F. for at least seven days, regardless of ambient air temperatures.

D. Concrete shall be wet cured for a minimum of 96 hours after placing and finishing.

E. Curing compounds will not be permitted for slabs, and framed concrete structure.

F. Keep permanent temperature record showing date and outside temperature for concreting operations. Thermometer readings shall be taken at start of work in morning, at noon, and again late in afternoon. Locations of concrete placed during such periods shall likewise be recorded, in such manner as to show any effect temperatures may have had on construction. Copies of temperature record shall be distributed daily to the Engineer.

3.11 HARDENER

A. Prepare surfaces and apply surface hardener to all concrete slabs.

B. Prepare surface and apply special sealer system to all concrete flatwork and curbs exposed to the elements.

3.12 REMOVAL OF FORMWORK, SHORING AND RESHORING

A. Contractor shall be responsible for proper removal of formwork, shoring, and reshoring.

B. Forms shall be removed only after concrete has attained sufficient strength to support its shown weight, construction loads to be placed thereon and lateral loads, without damage to structure or excessive deflection.

C. Forms and supports shall remain in place for not less than minimum periods of time noted below. These periods represent cumulative number of days or fractions thereof, consecutive unless otherwise approved by the Engineer during which time mean daily air temperature at surfaces of concrete is above 50 degrees F.

1. Horizontal surfaces: concrete shall have reached 100 day-degrees* and shall have attained strength of not less than 30 percent of f'c. Where such forms also support formwork for slab or beam soffits, removal times for latter shall govern.

   *Definition of day-degrees: Total number of days times mean daily air temperature at surfaces of concrete. For example, five days at temperature of 60 degrees F. equals 300 day degrees. Days or fractions of days in which temperature is below 50 degrees F. shall not be included in calculation of day-degrees.

D. Any test cylinders required to verify the specified minimum strengths for form removal shall be field cured under the same conditions as the concrete they represent. Such cylinders and testing shall be at the Contractor's expense.

3.13 QUALITY CONTROL

A. The testing laboratory will analyze the proposed concrete design mix and sample and test aggregate and concrete as follows:

1. Fine Aggregate Tests: Organic content, sieve analysis, fineness modulus.
2. Coarse Aggregate Tests: Sieve analysis
3. Mix Design: Refer to Section 033000-1.3 and 2.5 for requirements and submittal format.

B. The Testing Laboratory will perform the following field tests:

1. Secure samples in accordance with ASTM C 172 except modified for slump to comply with ASTM C 94.
2. Slump: ASTAM C 143, one test for each 100 cubic yards, or fraction thereof, at point of discharge for each day's pour of each type of concrete; additional tests when concrete consistency seems to have changed.
3. Air Content: ASTM C 173, volumetric method for lightweight or normal weight concrete. ASTM C 231 pressure method for normal weight concrete, one for each day's pour of each type of air-entrained concrete.
4. Concrete Temperature: Test hourly when air temperature is 40 degrees F (4 degrees C) and below, and when 80 degrees F (27 degrees C) and above, and each time a set of compression test specimens made.
5. Compression Test Specimen: ASTM C 31; one set of 4 standard cylinders for each compressive strength test, unless otherwise directed. Mold and store cylinders for laboratory cured test specimens except when field-cure test specimens are required.
6. Compressive Strength Tests: ASTM C 39; one set for each day's pour exceeding 5 cu. yds. plus additional sets for each 100 cu. yds. Of each concrete class placed in any one day; one specimen tested at 7 days, two specimens tested at 28 days, and one specimen retained in reserve for later testing if required.
7. When frequency of testing will provide less than 5 strength tests for a given class of concrete, conduct testing from at least 5 randomly selected batches or from each batch if fewer than 5 are used.
8. When strength of field-cured cylinders is less than 85 percent of companion laboratory-cured cylinders, evaluate current operations and provide corrective procedure for protecting and curing the in-place concrete.
9. Strength level of concrete will be considered satisfactory if averages of sets of three consecutive strength test results equal or exceed specified compressive strength, and no individual strength test result falls below specified compressive strength by more than 500 psi.

C. Test results will be reported in writing to the Structural Engineer and Contractor within 24 hours after tests. Reports of compressive strength tests shall contain the project identification name and number, date of concrete placement, name of concrete testing service, concrete type and class, location of concrete batch in structure, design compressive strength at 28 days, concrete mix proportions and materials, compressive breaking strength and type of break for both 7-day tests and 28-day tests.

1. Additional Tests: The testing service will make additional tests of in-place concrete when test results indicate specified concrete strengths and other characteristics have not been attained in the structure, as directed by the Engineer. Testing service may conduct tests to determine adequacy of concrete by cored cylinders complying with ASTM C 42, or by other methods as directed. Contractor shall pay for such tests when unacceptable concrete is verified.

2. Reinforcing: The testing service will inspect the location and installation details of all reinforcing steel for compliance with the approved drawings, specifications and ACI 318.

END OF SECTION

SECTION 26 56 70
ARIS WIND'S OFF-GRID REMOTE POWER UNIT (RPU)

PART 1 - GENERAL

1.01 DESCRIPTION

A. Work under this specification covers furnishing and installing seven (7) **concrete foundations** for the proposed Aris wind's off-grid remote power unit as shown on the plans or as directed by the Engineer.

B. Work under this specification covers furnishing and installing seven (7) pole units **Aris Wind's Off-Grid Remote Power Unit (RPU)** shown on the plans or as directed by the Engineer.

1.02 RELATED WORK

A. Section 03 30 00 – Cast in Place Concrete
B. Section 32 11 23 – Processed Aggregate Baser Course

1.03 QUALITY ASSURANCE

A. Where Form 818 is referred to, it means "State of Connecticut Department of Transportation Standard Specifications for Roads, Bridges and Incidental Construction, Form 818, January 2020" and including all Supplemental Specifications dated July 2020.

1.04 SUBMITTALS

A. Submit technical data to the Engineer for approval.

B. Submit stechnical components product data to the Engineer for approval.

C. Submit material certificate.

D. Submit material certificate for all pole components.

PART 2 - PRODUCTS

2.01 WINDPOWER (Permanent Magnetic Generator)
A. Rate Power Output: 300W
B. Rate Wind Speed: 20 mph.
C. Cut in Wind Speed: 4.5 mph.

2.03 SOLAR POWER
- A. Number of Panels: One (1) crystalline panels.
- B. Rated Power Output: 250W per panel
- C. Panel Size: 64.6 inch by 36.3 inch

2.04 LED LIGHTING
- A. Number of Lights: One (1)Lamp.
- B. Wattage / Fixture: 100W

2.05 CONTROL SYSTEM
- A. Charge Controller: Airsynergy Hibrid Controller
- B. Voltage to Battery: 24 volts.

2.06 BATTERIES
- A. Type: Absorbent Glass Mat (AGM)
- B. Number: Two (2) 12v batteries for 24v storage
- C. Capacity (Amps-Hrs): 230 amp hour options.

2.07 TOWER
- A. Material: Galvanized Steel
- B. Powder Coat Paint: White (Standard)

PART 3 - EXECUTION

3.01 CONSTRUCTION METHODS

A. Concrete Foundations installations shall conform to Section 03 30 00 Cast in Place concrete and of dimensions and details shown on the plans or as directed by the Engineer.

B. Aris Wind's Off-Grid Remote Power Unit (RPU) installations shall conform to manufacturer installation guidelines and recommendations.

PART 4 - PAYMENT

4.01 PAYMENT

A. Concrete Foundations shall be paid for at the contract lump sum price per cubic yard of concrete, which price shall include all materials, equipment, labor, incidentals thereto.

B. Aris Wind's Off-Grid Remote Power Unit (RPU) installation shall be paid for at the contract lump sum price specified color, which price shall include all materials, equipment, labor and incidentals thereto.

END OF SECTION

SECTION 32 11 23
PROCESSED AGGREGATE BASE COURSE

PART 1 - GENERAL

1.01 DESCRIPTION

A. Work under this specification covers furnishing and installing processed aggregate base materials consisting of a clean mixture of broken stone as shown on the plans or as directed by the Engineer.

1.02 RELATED WORK

A. Section 01 57 13 – Sedimentation Control System
B. Section 32 12 16 – Bituminous Concrete
C. Section 03 33 10 – Concrete Pads & Sidewalks

1.03 QUALITY ASSURANCE

A. Where Form 818 is referred to, it means "State of Connecticut Department of Transportation Standard Specifications for Roads, Bridges and Incidental Construction, Form 818, January 2020" and including all Supplemental Specifications.

1.04 SUBMITTALS

A. Submit material certification and gradation with specifications for processed aggregate base to the Engineer for approval.

B. Submit a weight ticket for material at time of delivery.

PART 2 - PRODUCTS

A. Processed aggregate base materials shall conform to the requirements of Form 818, Article M. 05.01. **Coarse aggregate shall be broken stone or gravel. Reclaimed Miscellaneous aggregate shall not be allowed.**

PART 3 - EXECUTION

3.01 CONSTRUCTION METHODS

A. Processed aggregate base installation shall conform to Form 818, Article 3.04.03.

PART 4 - MEASUREMENT AND PAYMENT

4.01 MEASUREMENT

A. Processed aggregate base shall be measured in cubic yards. Processed aggregate base will be measured horizontally in place after final grading and compaction. The thickness will be as indicated on the plans, or as ordered by the Engineer.

4.02 PAYMENT

A. This work shall be paid for at the contract lump sum price for "Processed Aggregate Base Course", complete in place which price shall include all materials, equipment, tools, and labor incidental thereto.

END OF SECTION

SECTION 32 12 16
BITUMINOUS CONCRETE

PART 1 - GENERAL

1.01 DESCRIPTION

A. Work under this specification covers furnishing and installing bituminous concrete pavement as shown on the plans or as directed by the Engineer.

1.02 RELATED WORK

A. Section 32 11 23 – Processed Aggregate Base Course
B. Section 32 17 23 – Pavement Markings

1.03 QUALITY ASSURANCE

A. Where Form 818 is referred to, it means "State of Connecticut Department of Transportation Standard Specifications for Roads, Bridges and Incidental Construction, Form 818, January 2020" and including all Supplemental Specifications.

1.04 SUBMITTALS

A. Submit mix design and job mix formula for all bituminous concrete, including all coarse aggregate, fine aggregate, mineral filler and liquid bituminous materials to the Engineer for approval.

B. Submit material delivery tickets for all bituminous concrete and tack coat materials.

C. Submit material certificate for all bituminous concrete and tack coat.

PART 2 - PRODUCTS

2.01 BITUMINOUS CONCRETE

A. The bituminous concrete materials and mixtures shall conform to the requirements Form 818, Article M.04 **and shall be of the class specified on the plans**.

PART 3 - EXECUTION

3.01 CONSTRUCTION METHODS

A. Bituminous concrete installation shall conform to Form 818, Article 4.06.03.

PART 4 - MEASUREMENT AND PAYMENT

4.01 MEASUREMENT

A. Bituminous concrete pavement shall be measured by the ton and in accordance with Form 818 Article 4.06.04. Tack coat material shall not be measured separately for payment, but shall be included in the work.

4.02 PAYMENT

A. Bituminous concrete pavement shall be paid for at the contract lump sum price per ton for "Bituminous Concrete Class 1" which price shall include materials, equipment, tools, labor and all incidentals thereto.

B. Bituminous concrete pavement shall be paid for at the contract lump sum price per ton for "Bituminous Concrete Class 2" which price shall include materials, equipment, tools, labor and all incidentals thereto.

END OF SECTION

SECTION 32 17 23
PAVEMENT MARKINGS

PART 1 - GENERAL

1.01 DESCRIPTION

A. Work under this specification covers furnishing and installing painted pavement markings and painted legends, arrows & markings as shown on the plans or as directed by the Engineer.

B. Work under this specification covers furnishing and installing signage as shown on the plans or as directed by the Engineer.

1.02 RELATED WORK

A. Section 32 12 16 - Bituminous Concrete

1.03 QUALITY ASSURANCE

A. Where Form 818 is referred to, it means "State of Connecticut Department of Transportation Standard Specifications for Roads, Bridges and Incidental Construction, Form 818, 2020" and including all Supplemental Specifications.

1.04 SUBMITTALS

A. Submit paint technical data to the Engineer for approval.

B. Submit signage components product data to the Engineer for approval.

C. Submit material certificate for paint.

D. Submit material certificate for all signage components.

PART 2 - PRODUCTS

2.01 PAINTED PAVEMENT MARKINGS

A. Painted pavement marking materials shall shall conform to Form 818, Article 12.09.02, Article M.07.20 for waterborne pavement marking paint.

2.03 SIGNAGE

A. Signage materials shall conform to the requirements of Form 818, Article 12.08.02.

PART 3 - EXECUTION

3.01 CONSTRUCTION METHODS

A. Painted pavement marking installations shall conform to Form 818, Article 12.09.03.

B. Signage installations shall conform to Form 818, Article 12.08.03.

PART 4 - MEASUREMENT AND PAYMENT

4.01 MEASUREMENT

A. Painted pavement markings shall be measured per linear foot for each type of marking placed and accepted.

B. Painted legends, arrows & markings shall be measured per square foot of marking placed and accepted.

C. Signage shall be measured for payment by the number of square feet of sign face-sheet aluminum of this type specified, installed and accepted.

4.02 PAYMENT

A. Painted pavement markings shall be paid for at the contract lump sum price per linear foot of "Painted Pavement Markings (Width & Color)", which price shall include all materials, equipment, labor and incidentals for layout, pavement cleaning, installation and protection during drying.

B. Painted pavement legends, arrows, and markings shall be paid for at the contract lump sum price per square foot of "Painted Pavement Legends, Arrows & Markings" specified style and color, which price shall include all materials, equipment, labor and incidentals for layout, pavement cleaning, installation and protection during drying.

C. Signage shall be paid for at the contract lump sum price per square foot "Sign Face Sheet Aluminum" of the type specified complete in place, which price shall include the completed sign, supports, mounting, hardware, all materials, equipment, labor and work incidentals thereto.

END OF SECTION

SECTION 32 31 13
CHAIN LINK FENCE

PART 1 - GENERAL

1.01 DESCRIPTION

A. Work under this specification covers furnishing and installing new chain link fence as indicated on the plans.

1.02 RELATED WORK

A. Not applicable.

1.03 QUALITY ASSURANCE

B. Where Form 818 is referred to, it means "State of Connecticut Department of Transportation Standard Specifications for Roads, Bridges and Incidental Construction, Form 818, January 2020" and including all Supplemental Specifications.

C. Single-Source Responsibility: Obtain chain link fence, including accessories, fittings, and fastenings, from a single source.

1.04 SUBMITTALS

A. Submit product data in the form of manufacturer's technical data, specifications, and installation instructions for fence and gate posts, fabric, gates, hardware and accessories.

B. Submit shop drawings showing details of fence post installations, hardware and accessories.

PART 2 - PRODUCTS

2.01 GENERAL

A. Chain link fence and gates shall conform to Form 818 Article 9.13.02 and shall be aluminum coated steel fabric with galvanized posts, rails and hardware.

B. Chain link fence shall have a top rail.

PART 3 - EXECUTION

3.01 SURFACE CONDITIONS

A. Prior to all work of this section, carefully inspect the installed work of all other trades and verify that all such work is complete to the point where this installation may properly commence.

3.02 INSTALLATION

A. Install the chain link fence in accordance with Form 818 Article 9.13.03.

B. Foundations for fence posts in earth or rock shall conform to the details shown on the plans.

3.03 CLEANUP

A. Leave the area of construction neat and clean. All excess materials or other miscellaneous items not part of the finished construction shall be removed from the site.

PART 4 - MEASUREMENT AND PAYMENT

4.01 MEASUREMENT

A. Chain link fence shall be measured by linear feet of chain link fence installed, of the height specified, completed and accepted. Chain link fence shall be measured from terminal post to terminal post. Earth excavation and backfilling and concrete, rock excavation/drilling and grouting, shall not be measured separately for payment, but shall be included in the work.

4.02 PAYMENT

A. Chain link fence shall be paid for at the contract lump sum per linear foot for "Chain Link Fencing – 6' High" of the height specified, complete and in place which price shall include all materials, equipment, tools and labor incidental thereto.

END OF SECTION

SECTION 32 31 20
STEEL FENCE

PART 1 - GENERAL

1.01 DESCRIPTION

A. Work under this specification covers furnishing and installing new **Montage Plus Majestic 3-Rail Fence** steel fence with a handrail (or approved equal) as indicated on the plans or as directed by the engineer.

1.02 RELATED WORK

A. Section 03 30 00 Cast in Place Concrete
B. Section 32 11 23 Processed Aggregate Base

1.03 QUALITY ASSURANCE

C. Where Form 818 is referred to, it means "State of Connecticut Department of Transportation Standard Specifications for Roads, Bridges and Incidental Construction, Form 818, January 2020" and including all Supplemental Specifications dated July 2020.

D. Single-Source Responsibility: Obtain steel link fence, including handrails, accessories, fittings, and fastenings, from a single source.

1.04 SUBMITTALS

A. Submit product data in the form of manufacturer's technical data, specifications, and installation instructions for fence and posts, fence handrail, hardware and accessories.

B. Submit shop drawings showing details of steel fence post installations, handrail installation, hardware and accessories.

PART 2 - PRODUCTS

2.01 GENERAL

A. Steel fence shall be **4 Feet Minimum High, Montage Plus Majestic 3-Rail Fence,** manufactured by **Ameristar** (or approved equal). Contractor shall provide alternate bid pricing when specifying approved equal style/manufacturer options.

B. Steel fence shall have a handrail installed between 34" – 38" above finish grade with 12" handrail extensions pursuant to the Americans with disabilities act accessibility guidelines for buildings and facilities shall be installed on all ramps depicted on the plans.

C. The height, diameter and attachment of these handrails shall comply with all applicable codes and be consistent with the manufacturer's recommendations.

D. Fence panels shall be face mounted/bolted to concrete multi-use tral slab so as to be easily removable for emergency operations and maintenance activities (Alternate connections may be reviewed and approved by the City of New London and US Army Corps of Engineers (USACE).

PART 3 - EXECUTION

3.01 SURFACE CONDITIONS

A. Prior to all work of this section, carefully inspect the installed work of all other trades and verify that all such work is complete to the point where this installation may properly commence.

3.02 INSTALLATION

A. Install the steel fence in accordance with manufacturer guideline and recommendations.

B. Foundations for fence posts in earth or rock shall conform to Form 818, January 2020" and including all Supplemental Specifications dated July 2020, M.10.1.3 and the details shown on the plans.

3.03 CLEANUP

A. Leave the area of construction neat and clean. All excess materials or other miscellaneous items not part of the finished construction shall be removed from the site.

PART 4 - MEASUREMENT AND PAYMENT

4.01 MEASUREMENT

A. Steel fence shall be measured by linear feet of steel fence installed, of the height specified, completed and accepted. Steel fence shall be measured from terminal post to terminal post. Earth excavation and backfilling and concrete, rock excavation/drilling and grouting, shall not be measured separately for payment, but shall be included in the work.

4.02 PAYMENT

A. Steel fence shall be paid for at the contract lump sum per linear foot for "Steel Fence" of the height specified, complete and in place which price shall include all materials, equipment, tools and labor incidental thereto.

END OF SECTION

SECTION 32 39 13
REMOVABLE BOLLARDS

PART 1 - GENERAL

1.01 DESCRIPTION

A. Work under this specification covers furnishing and installing new Reliance Foundry manufacturer "**Removable Aluminum Bollards"** (or approved equal) as indicated on the plans or as directed by the engineer.

1.02 RELATED WORK

A. Section 03 30 00 Cast in Place Concrete
B. Section 32 11 23 Processed Aggregate Base

1.03 QUALITY ASSURANCE

C. Where Form 818 is referred to, it means "State of Connecticut Department of Transportation Standard Specifications for Roads, Bridges and Incidental Construction, Form 818, January 2020" and including all Supplemental Specifications dated July 2020.

D. Single-Source Responsibility: Obtain removable locking aluminum bollards bolts, anchors, accessories, fittings, and fastenings, from a single source.

1.04 SUBMITTALS

A. Submit product data in the form of manufacturer's technical data, specifications, and installation instructions for fence and posts, fence handrail, hardware and accessories.
    a. Preparation instructions and recommendations.
    b. Storage and handling requirements and recommendations.
    c. Installation methods.
    d. Cleaning and maintenance instructions.

B. Submit shop drawings showing details of removable bollard installations, hardware and accessories.

C. Maintenance Information: Submit manufacturer's touch-up, cleaning, and maintenance information.

D. Warranty Documentation: Submit manufacturer's warranty documentation.

PART 2 - PRODUCTS

2.01 GENERAL

A. Removable Bollard shall be Model **R-7539-AL REMOVABLE ALUMINUM** manufactured by **Reliance Foundry** (or approved equal). Contractor shall provide alternate bid pricing when specifying approved equal style/manufacturer options.

B. Removable bollards shall have dimensions as shown on the plans or directed by the Engineer.

PART 3 - EXECUTION

3.01 SURFACE CONDITIONS

A. Prior to all work of this section, carefully inspect the installed work of all other trades and verify that all such work is complete to the point where this installation may properly commence.

3.02 INSTALLATION

A. Install the removable bollards in accordance with manufacturer guideline and recommendations.

B. Foundations for removable bollards foundations in earth or rock shall conform to Form 818, January 2020" and including all Supplemental Specifications dated July 2020, M.10.1.3 and the details shown on the plans.

C. Damaged, cracked, chipped, deformed or marred products are not acceptable. Field touch-up minor imperfections in accordance with manufacturer's instructions.

3.03 CLEANUP

A. Cleaning: Immediately prior to Substantial Completion, clean bollards in accordance with manufacturer's instructions to remove dust, dirt, adhesives, and other foreign materials.

B. Leave the area of construction neat and clean. All excess materials or other miscellaneous items not part of the finished construction shall be removed from the site.

C. Protection: Protect installed work from damage.

PART 4 - MEASUREMENT AND PAYMENT

4.01 MEASUREMENT

A. Removable bollards shall be measured by unit installed, of the height specified, completed and accepted. Earth excavation and backfilling and concrete, rock excavation/drilling and grouting, shall not be measured separately for payment, but shall be included in the work.

4.02 PAYMENT

A. Removable bollards shall be paid for at the contract lump sum per unit for "Removable Bollards" of the height specified, complete and in place which price shall include all materials, equipment, tools and labor incidental thereto.

END OF SECTION

TAB G

Prevailing Wage Rate Information

Minimum Rates and Classifications for
Heavy/Highway Construction

ID#: 21-22566

Connecticut Department of Labor
Wage and Workplace Standards Division

By virtue of the authority vested in the Labor Commissioner under provisions of Section 31-53 of the General Statutes of Connecticut, as amended, the following are declared to be the prevailing rates and welfare payments and will apply only where the contract is advertised for bid within 20 days of the date on which the rates are established. Any contractor or subcontractor not obligated by agreement to pay to the welfare and pension fund shall pay this amount to each employee as part of his/her hourly wages.

Project Number: 2021-12 Project Town: New London
State#: FAP#:

Project: Multi-Use Pathway

CLASSIFICATION	Hourly Rate	Benefits
1) Boilermaker	33.79	34% + 8.96
1a) Bricklayer, Cement Masons, Cement Finishers, Plasterers, Stone Masons	36.45	34.44
2) Carpenters, Piledrivermen	34.53	25.64
2a) Diver Tenders	34.53	25.64
3) Divers	42.99	25.64
03a) Millwrights	35.64	26.49
4) Painters: (Bridge Construction) Brush, Roller, Blasting (Sand, Water, etc.), Spray	52.25	22.55
4a) Painters: Brush and Roller	35.62	22.55
4b) Painters: Spray Only	38.62	22.55
4c) Painters: Steel Only	37.62	22.55
4d) Painters: Blast and Spray	38.62	22.55
4e) Painters: Tanks, Tower and Swing	37.62	22.55

As of: May 13, 2021

5) Electrician (Trade License required: E-1,2 L-5,6 C-5,6 T-1,2 L-1,2 V-1,2,7,8,9)	39.0	29.91+3% of gross wage
6) Ironworkers: Ornamental, Reinforcing, Structural, and Precast Concrete Erection	36.67	37.62 + a
7) Plumbers (Trade License required: (P-1,2,6,7,8,9 J-1,2,3,4 SP-1,2) and Pipefitters (Including HVAC Work) (Trade License required: S-1,2,3,4,5,6,7,8 B-1,2,3,4 D-1,2,3,4 G-1, G-2, G-8, G-9)	44.63	32.95
----LABORERS---- -		
8) Group 1: Laborer (Unskilled), Common or General, acetylene burner, concrete specialist	31.5	23.25
9) Group 2: Chain saw operators, fence and guard rail erectors, pneumatic tool operators, powdermen	31.75	23.25
10) Group 3: Pipelayers	32.0	23.25
11) Group 4: Jackhammer/Pavement breaker (handheld); mason tenders (cement/concrete), catch basin builders, asphalt rakers, air track operators, block paver, curb setter and forklift operators	32.0	23.25
12) Group 5: Toxic waste removal (non-mechanical systems)	33.5	23.25
13) Group 6: Blasters	33.25	23.25
Group 7: Asbestos/lead removal, non-mechanical systems (does not include leaded joint pipe)	32.5	23.25
Group 8: Traffic control signalmen	18.0	23.25
Group 9: Hydraulic Drills	32.25	23.25
----LABORERS (TUNNEL CONSTRUCTION, FREE AIR). Shield Drive and Liner Plate Tunnels in Free Air.----		
13a) Miners, Motormen, Mucking Machine Operators, Nozzle Men, Grout Men, Shaft & Tunnel Steel & Rodmen, Shield & Erector, Arm Operator, Cable Tenders	33.73	23.25 + a
13b) Brakemen, Trackmen	32.76	23.25 + a
----CLEANING, CONCRETE AND CAULKING TUNNEL----		

14) Concrete Workers, Form Movers, and Strippers	32.76	23.25 + a
15) Form Erectors	33.09	23.25 + a
----ROCK SHAFT LINING, CONCRETE, LINING OF SAME AND TUNNEL IN FREE AIR:----		
16) Brakemen, Trackmen, Tunnel Laborers, Shaft Laborers	32.76	23.25 + a
17) Laborers Topside, Cage Tenders, Bellman	32.65	23.25 + a
18) Miners	33.73	23.25 + a
----TUNNELS, CAISSON AND CYLINDER WORK IN COMPRESSED AIR: ----		
18a) Blaster	40.22	23.25 + a
19) Brakemen, Trackmen, Groutman, Laborers, Outside Lock Tender, Gauge Tenders	40.02	23.25 + a
20) Change House Attendants, Powder Watchmen, Top on Iron Bolts	38.04	23.25 + a
21) Mucking Machine Operator	40.81	23.25 + a
----TRUCK DRIVERS----(*see note below)		
Two axle trucks	30.16	27.16 + a
Three axle trucks; two axle ready mix	30.27	27.16 + a
Three axle ready mix	30.33	27.16 + a
Four axle trucks, heavy duty trailer (up to 40 tons)	30.39	27.16 + a
Four axle ready-mix	30.44	27.16 + a
Heavy duty trailer (40 tons and over)	30.66	27.16 + a

As of: May 13, 2021

Specialized earth moving equipment other than conventional type on-the road trucks and semi-trailer (including Euclids)	30.44	27.16 + a
----POWER EQUIPMENT OPERATORS----		
Group 1: Crane handling or erecting structural steel or stone, hoisting engineer (2 drums or over), front end loader (7 cubic yards or over), Work Boat 26 ft. & Over, Tunnel Boring Machines. (Trade License Required)	43.88	25.80 + a
Group 2: Cranes (100 ton rate capacity and over); Excavator over 2 cubic yards; Piledriver ($3.00 premium when operator controls hammer); Bauer Drill/Caisson. (Trade License Required)	43.53	25.80 + a
Group 3: Excavator/Backhoe under 2 cubic yards; Cranes (under 100 ton rated capacity), Gradall; Master Mechanic; Hoisting Engineer (all types of equipment where a drum and cable are used to hoist or drag material regardless of motive power of operation), Rubber Tire Excavator (Drott-1085 or similar);Grader Operator; Bulldozer Fine Grade (slopes, shaping, laser or GPS, etc.). (Trade License Required)	42.72	25.80 + a
Group 4: Trenching Machines; Lighter Derrick; Concrete Finishing Machine; CMI Machine or Similar; Koehring Loader (Skooper)	42.3	25.80 + a
Group 5: Specialty Railroad Equipment; Asphalt Paver; Asphalt Spreader; Asphalt Reclaiming Machine; Line Grinder; Concrete Pumps; Drills with Self Contained Power Units; Boring Machine; Post Hole Digger; Auger; Pounder; Well Digger; Milling Machine (over 24	41.65	25.80 + a
Group 5 continued: Side Boom; Combination Hoe and Loader; Directional Driller.	41.65	25.80 + a
Group 6: Front End Loader (3 up to 7 cubic yards); Bulldozer (rough grade dozer).	41.31	25.80 + a
Group 7: Asphalt Roller; Concrete Saws and Cutters (ride on types); Vermeer Concrete Cutter; Stump Grinder; Scraper; Snooper; Skidder; Milling Machine (24	40.94	25.80 + a
Group 8: Mechanic, Grease Truck Operator, Hydroblaster, Barrier Mover, Power Stone Spreader; Welder; Work Boat under 26 ft.; Transfer Machine.	40.51	25.80 + a
Group 9: Front End Loader (under 3 cubic yards), Skid Steer Loader regardless of attachments (Bobcat or Similar); Fork Lift, Power Chipper; Landscape Equipment (including hydroseeder).	40.04	25.80 + a
Group 10: Vibratory Hammer, Ice Machine, Diesel and Air Hammer, etc.	37.81	25.80 + a
Group 11: Conveyor, Earth Roller; Power Pavement Breaker (whiphammer), Robot Demolition Equipment.	37.81	25.80 + a
Group 12: Wellpoint Operator.	37.74	25.80 + a

Group 13: Compressor Battery Operator.	37.11	25.80 + a
Group 14: Elevator Operator; Tow Motor Operator (Solid Tire No Rough Terrain).	35.87	25.80 + a
Group 15: Generator Operator; Compressor Operator; Pump Operator; Welding Machine Operator; Heater Operator.	35.43	25.80 + a
Group 16: Maintenance Engineer/Oiler	34.72	25.80 + a
Group 17: Portable asphalt plant operator; portable crusher plant operator; portable concrete plant operator.	39.42	25.80 + a
Group 18: Power Safety Boat; Vacuum Truck; Zim Mixer; Sweeper; (minimum for any job requiring CDL license).	36.77	25.80 + a
**NOTE: SEE BELOW		
----LINE CONSTRUCTION----(Railroad Construction and Maintenance)----		
20) Lineman, Cable Splicer, Technician	48.19	6.5% + 22.00
21) Heavy Equipment Operator	42.26	6.5% + 19.88
22) Equipment Operator, Tractor Trailer Driver, Material Men	40.96	6.5% + 19.21
23) Driver Groundmen	26.5	6.5% + 9.00
23a) Truck Driver	40.96	6.5% + 17.76
----LINE CONSTRUCTION----		
24) Driver Groundmen	30.92	6.5% + 9.70
25) Groundmen	22.67	6.5% + 6.20
26) Heavy Equipment Operators	37.1	6.5% + 10.70
27) Linemen, Cable Splicers, Dynamite Men	41.22	6.5% + 12.20

As of: May 13, 2021

28) Material Men, Tractor Trailer Drivers, Equipment Operators	35.04	6.5% + 10.45

As of: May 13, 2021

Project: Multi-Use Pathway

Welders: Rate for craft to which welding is incidental.

**Note: Hazardous waste removal work receives additional $1.25 per hour for truck drivers.*

***Note: Hazardous waste premium $3.00 per hour over classified rate*

ALL Cranes: When crane operator is operating equipment that requires a fully licensed crane operator to operate he receives an extra $4.00 premium in addition to the hourly wage rate and benefit contributions:

1) Crane handling or erecting structural steel or stone; hoisting engineer (2 drums or over)

2) Cranes (100 ton rate capacity and over) Bauer Drill/Caisson

3) Cranes (under 100 ton rated capacity)

Crane with 150 ft. boom (including jib) - $1.50 extra
Crane with 200 ft. boom (including jib) - $2.50 extra
Crane with 250 ft. boom (including jib) - $5.00 extra
Crane with 300 ft. boom (including jib) - $7.00 extra
Crane with 400 ft. boom (including jib) - $10.00 extra

All classifications that indicate a percentage of the fringe benefits must be calculated at the percentage rate times the "base hourly rate".

Apprentices duly registered under the Commissioner of Labor's regulations on "Work Training Standards for Apprenticeship and Training Programs" Section 31-51-d-1 to 12, are allowed to be paid the appropriate percentage of the prevailing journeymen hourly base and the full fringe benefit rate, providing the work site ratio shall not be less than one full-time journeyperson instructing and supervising the work of each apprentice in a specific trade.

~~Connecticut General Statute Section 31-55a: Annual Adjustments to wage rates by contractors doing

The Prevailing wage rates applicable to this project are subject to annual adjustments each July 1st for the duration of the project.

Each contractor shall pay the annual adjusted prevailing wage rate that is in effect each July 1st, as posted by the Department of Labor.

It is the contractor's responsibility to obtain the annual adjusted prevailing wage rate increases directly from the Department of Labor's website.

The annual adjustments will be posted on the Department of Labor's Web page: www.ct.gov/dol. For those without internet access, please contact the division listed below.

The Department of Labor will continue to issue the initial prevailing wage rate schedule to the Contracting Agency for the project.

All subsequent annual adjustments will be posted on our Web Site for contractor access.

Contracting Agencies are under no obligation pursuant to State labor law to pay any increase due to the annual adjustment provision.

Effective October 1, 2005 - Public Act 05-50: any person performing the work of any mechanic, laborer, or worker shall be paid prevailing wage

All Person who perform work ON SITE must be paid prevailing wage for the appropriate mechanic, laborer, or worker classification.

All certified payrolls must list the hours worked and wages paid to All Persons who perform work ON SITE regardless of their ownership i.e.: (Owners, Corporate Officers, LLC Members, Independent Contractors, et. al)

Reporting and payment of wages is required regardless of any contractual relationship alleged to exist between the contractor and such person.

As of: May 13, 2021

Project: Multi-Use Pathway

~~Unlisted classifications needed for work not included within the scope of the classifications listed may be added after award only as provided in the labor standards contract clause (29 CFR 5.5 (a) (1) (ii)).

Please direct any questions which you may have pertaining to classification of work and payment of prevailing wages to the Wage and Workplace Standards Division, telephone (860)263-6790.

As of: May 13, 2021

~NOTICE~

TO ALL CONTRACTING AGENCIES

Please be advised that Connecticut General Statutes Section 31-53, requires the contracting agency to certify to the Department of Labor, the total dollar amount of work to be done in connection with such public works project, regardless of whether such project consists of one or more contracts.

Please find the attached "Contracting Agency Certification Form" to be completed and returned to the Department of Labor, Wage and Workplace Standards Division, Public Contract Compliance Unit.

✎ Inquiries can be directed to (860)263-6543.

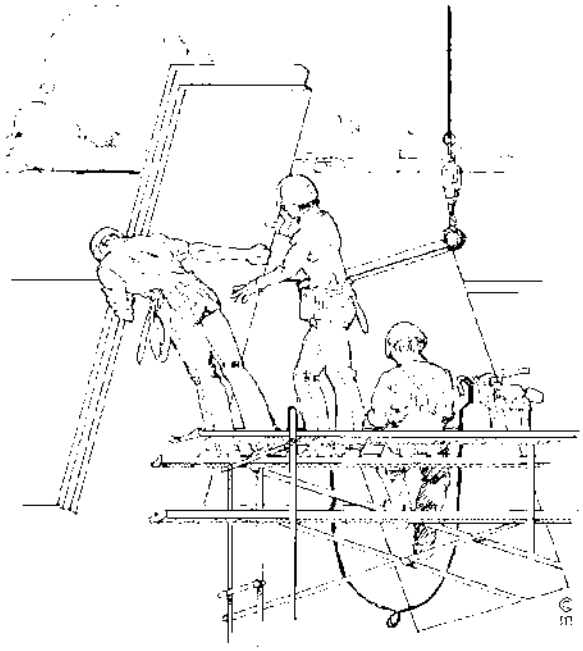

CONNECTICUT DEPARTMENT OF LABOR
WAGE AND WORKPLACE STANDARDS DIVISION
CONTRACT COMPLIANCE UNIT

CONTRACTING AGENCY CERTIFICATION FORM

I, _____, acting in my official capacity as _____,
authorized representative title

for _____, located at _____,
contracting agency address

do hereby certify that the total dollar amount of work to be done in connection with

_____, located at _____,
project name and number address

shall be $_____, which includes all work, regardless of whether such project

consists of one or more contracts.

CONTRACTOR INFORMATION

Name:_____

Address:_____
Authorized Representative:_____
Approximate Starting Date: _____

Approximate Completion Date:_____

_____ _____
Signature Date

Return To: Connecticut Department of Labor
Wage & Workplace Standards Division
Contract Compliance Unit
200 Folly Brook Blvd.
Wethersfield, CT 06109

Date Issued: _____

CONNECTICUT DEPARTMENT OF LABOR
WAGE AND WORKPLACE STANDARDS DIVISION

CONTRACTORS WAGE CERTIFICATION FORM

Construction Manager at Risk/General Contractor/Prime Contractor

I,_____of _____
Officer, Owner, Authorized Rep. Company Name

do hereby certify that the _____
Company Name

_____
Street

_____
City

and all of its subcontractors will pay all workers on the

_____
Project Name and Number

_____
Street and City

the wages as listed in the schedule of prevailing rates required for such project (a copy of which is attached hereto).

_____
Signed

Subscribed and sworn to before me this _____ day of _____,_____.

_____
Notary Public

Return to:

Connecticut Department of Labor
Wage & Workplace Standards Division
200 Folly Brook Blvd.
Wethersfield, CT 06109

Rate Schedule Issued (Date): _____

Connecticut Department of Labor
Wage and Workplace Standards Division
FOOTNOTES

⇨ Please Note: If the "Benefits" listed on the schedule for the following occupations includes a letter(s) (+ a or + a+b for instance), refer to the information below.

Benefits to be paid at the appropriate prevailing wage rate for the listed occupation.

If the "Benefits" section for the occupation lists only a dollar amount, disregard the information below.

Bricklayers, Cement Masons, Cement Finishers, Concrete Finishers, Stone Masons
(Building Construction) and
(Residential- Hartford, Middlesex, New Haven, New London and Tolland Counties)

a. Paid Holiday: Employees shall receive 4 hours for Christmas Eve holiday provided the employee works the regularly scheduled day before and after the holiday. Employers may schedule work on Christmas Eve and employees shall receive pay for actual hours worked in addition to holiday pay.

Elevator Constructors: Mechanics

a. Paid Holidays: New Year's Day, Memorial Day, Independence Day, Labor Day, Veterans' Day, Thanksgiving Day, Christmas Day, plus the Friday after Thanksgiving.

b. Vacation: Employer contributes 8% of basic hourly rate for 5 years or more of service or 6% of basic hourly rate for 6 months to 5 years of service as vacation pay credit.

Glaziers

a. Paid Holidays: Labor Day and Christmas Day.

Power Equipment Operators
(Heavy and Highway Construction & Building Construction)

a. Paid Holidays: New Year's Day, Good Friday, Memorial day, Independence Day, Labor Day, Thanksgiving Day and Christmas Day, provided the employee works 3 days during the week in which the holiday falls, if scheduled, and if scheduled, the working day before and the working day after the holiday. Holidays falling on Saturday may be observed on Saturday, or if the employer so elects, on the preceding Friday.

Ironworkers

a. Paid Holiday: Labor Day provided employee has been on the payroll for the 5 consecutive work days prior to Labor Day.

Laborers (Tunnel Construction)

a. Paid Holidays: New Year's Day, Memorial Day, Independence Day, Labor Day, Thanksgiving Day and Christmas Day. No employee shall be eligible for holiday pay when he fails, without cause, to work the regular work day preceding the holiday or the regular work day following the holiday.

Roofers

a. Paid Holidays: July 4th, Labor Day, and Christmas Day provided the employee is employed 15 days prior to the holiday.

Sprinkler Fitters

a. Paid Holidays: Memorial Day, July 4th, Labor Day, Thanksgiving Day and Christmas Day, provided the employee has been in the employment of a contractor 20 working days prior to any such paid holiday.

Truck Drivers

(Heavy and Highway Construction & Building Construction)

a. Paid Holidays: New Year's Day, Memorial Day, Independence Day, Labor Day, Thanksgiving Day, Christmas day, and Good Friday, provided the employee has at least 31 calendar days of service and works the last scheduled day before and the first scheduled day after the holiday, unless excused.

Information Bulletin
Occupational Classifications

The Connecticut Department of Labor has the responsibility to properly determine *"job classification"* on prevailing wage projects covered under C.G.S. Section 31-53(d).

Note: This information is intended to provide a sample of some occupational classifications for guidance purposes only. It is not an all-inclusive list of each occupation's duties. This list is being provided only to highlight some areas where a contractor may be unclear regarding the proper classification. If unsure, the employer should seek guidelines for CTDOL.

Below are additional clarifications of specific job duties performed for certain classifications:

- ***ASBESTOS WORKERS***

Applies all insulating materials, protective coverings, coatings and finishes to all types of mechanical systems.

- ***ASBESTOS INSULATOR***

Handle, install apply, fabricate, distribute, prepare, alter, repair, dismantle, heat and frost insulation, including penetration and fire stopping work on all penetration fire stop systems.

- ***BOILERMAKERS***

Erects hydro plants, incomplete vessels, steel stacks, storage tanks for water, fuel, etc. Builds incomplete boilers, repairs heat exchanges and steam generators.

- ***BRICKLAYERS, CEMENT MASONS, CEMENT FINISHERS, MARBLE MASONS, PLASTERERS, STONE MASONS, PLASTERERS. STONE MASONS, TERRAZZO WORKERS, TILE SETTERS***

Lays building materials such as brick, structural tile and concrete cinder, glass, gypsum, terra cotta block. Cuts, tools and sets marble, sets stone, finishes concrete, applies decorative steel, aluminum and plastic tile, applies cements, sand, pigment and marble chips to floors, stairways, etc.

- ***CARPENTERS, MILLWRIGHTS. PILEDRIVERMEN. LATHERS. RESILEINT FLOOR LAYERS, DOCK BUILDERS, DIKERS, DIVER TENDERS***

Constructs, erects, installs and repairs structures and fixtures of wood, plywood and wallboard. Installs, assembles, dismantles, moves industrial machinery. Drives piling into ground to provide foundations for structures such as buildings and bridges, retaining walls for earth embankments, such as cofferdams. Fastens wooden, metal or rockboard lath to walls, ceilings and partitions of buildings, acoustical tile layer, concrete form builder. Applies firestopping materials on fire resistive joint systems only. Installation of curtain/window walls only where attached to wood or metal studs. Installation of insulated material of all types whether blown, nailed or attached in other ways to walls, ceilings and floors of buildings. Assembly and installation of modular furniture/furniture systems. Free-standing furniture is not covered. This includes free standing: student chairs, study top desks, book box desks, computer furniture, dictionary stand, atlas stand, wood shelving, two-position information access station, file cabinets, storage cabinets, tables, etc.

- **LABORER, CLEANING**

• The clean up of any construction debris and the general (heavy/light) cleaning, including sweeping, wash down, mopping, wiping of the construction facility and its furniture, washing, polishing, and dusting.

- **DELIVERY PERSONNEL**

• If delivery of supplies/building materials is to one common point and stockpiled there, prevailing wages <u>are not required</u>. If the delivery personnel are involved in the distribution of the material to multiple locations within the construction site then they would have to be paid prevailing wages for the type of work performed: laborer, equipment operator, electrician, ironworker, plumber, etc.

• An example of this would be where delivery of drywall is made to a building and the delivery personnel distribute the drywall from one "stockpile" location to further sub-locations on each floor. Distribution of material around a construction site is the job of a laborer or tradesman, and not a delivery personnel.

- ***ELECTRICIANS***

Install, erect, maintenance, alteration or repair of any wire, cable, conduit, etc., which generates, transforms, transmits or uses electrical energy for light, heat, power or other purposes, including the Installation or maintenance of telecommunication, LAN wiring or computer equipment, and low voltage wiring. ****License required per Connecticut General Statutes: E-1,2 L-5,6 C-5,6 T-1,2 L-1,2 V-1,2,7,8,9.***

- ***ELEVATOR CONSTRUCTORS***

Install, erect, maintenance and repair of all types of elevators, escalators, dumb waiters and moving walks. ***License required by Connecticut General Statutes: R-1,2,5,6.***

- ***FORK LIFT OPERATOR***

Laborers Group 4) Mason Tenders - operates forklift solely to assist a mason to a maximum height of nine (9) feet only.

Power Equipment Operator Group 9 - operates forklift to assist any trade, and to assist a mason to a height over nine (9) feet.

- ***GLAZIERS***

Glazing wood and metal sash, doors, partitions, and 2 story aluminum storefronts. Installs glass windows, skylights, store fronts and display cases or surfaces such as building fronts, interior walls, ceilings and table tops and metal store fronts. Installation of aluminum window walls and curtain walls is the "joint" work of glaziers and ironworkers, which require equal composite workforce.

- ***IRONWORKERS***

Erection, installation and placement of structural steel, precast concrete, miscellaneous iron, ornamental iron, metal curtain wall, rigging and reinforcing steel. Handling, sorting, and installation of reinforcing steel (rebar). Metal bridge rail (traffic), metal bridge handrail, and decorative security fence installation. Installation of aluminum window walls and curtain walls is the "joint" work of glaziers and ironworkers which require equal composite workforce.

- ***INSULATOR***

• Installing fire stopping systems/materials for "Penetration Firestop Systems": transit to cables, electrical conduits, insulated pipes, sprinkler pipe penetrations, ductwork behind radiation, electrical cable trays, fire rated pipe penetrations, natural polypropylene, HVAC ducts, plumbing bare metal, telephone and communication wires, and boiler room ceilings.

- ***LABORERS***

Acetylene burners, asphalt rakers, chain saw operators, concrete and power buggy operator, concrete saw operator, fence and guard rail erector (except metal bridge rail (traffic), decorative security fence (non-metal).

installation.), hand operated concrete vibrator operator, mason tenders, pipelayers (installation of storm drainage or sewage lines on the street only), pneumatic drill operator, pneumatic gas and electric drill operator, powermen and wagon drill operator, air track operator, block paver, curb setters, blasters, concrete spreaders.

- ***PAINTERS***

Maintenance, preparation, cleaning, blasting (water and sand, etc.), painting or application of any protective coatings of every description on all bridges and appurtenances of highways, roadways, and railroads. Painting, decorating, hardwood finishing, paper hanging, sign writing, scenic art work and drywall hhg for any and all types of building and residential work.

- ***LEAD PAINT REMOVAL***

• Painter's Rate

1. Removal of lead paint from bridges.
2. Removal of lead paint as preparation of any surface to be repainted.
3. Where removal is on a Demolition project prior to reconstruction.

• Laborer's Rate

1. Removal of lead paint from any surface NOT to be repainted.
2. Where removal is on a *TOTAL* Demolition project only.

- ***PLUMBERS AND PIPEFITTERS***

Installation, repair, replacement, alteration or maintenance of all plumbing, heating, cooling and piping. ****License required per Connecticut General Statutes: P-1,2,6,7,8,9 J-1,2,3,4 SP-1,2 S-1,2,3,4,5,6,7,8 B-1,2,3,4 D-1,2,3,4.***

- ***POWER EQUIPMENT OPERATORS***

Operates several types of power construction equipment such as compressors, pumps, hoists, derricks, cranes, shovels, tractors, scrapers or motor graders, etc. Repairs and maintains equipment. ****License required, crane operators only, per Connecticut General Statutes.***

- ***ROOFERS***

Covers roofs with composition shingles or sheets, wood shingles, slate or asphalt and gravel to waterproof roofs, including preparation of surface. (demolition or removal of any type of roofing and or clean-up of any and all areas where a roof is to be relaid.)

- ***SHEETMETAL WORKERS***

Fabricate, assembles, installs and repairs sheetmetal products and equipment in such areas as ventilation, air-conditioning, warm air heating, restaurant equipment, architectural sheet metal work, sheetmetal roofing, and aluminum gutters. Fabrication, handling, assembling, erecting, altering, repairing, etc. of coated metal material panels and composite metal material panels when used on building exteriors and interiors as soffits, facia, louvers, partitions, canopies, cornice, column covers, awnings, beam covers, cladding, sun shades, lighting troughs, spires, ornamental roofing, metal ceilings, mansards, copings, ornamental and ventilation hoods, vertical and horizontal siding panels, trim, etc. The sheet metal classification also applies to the vast variety of coated metal material panels and composite metal material panels that have evolved over the years as an alternative to conventional ferrous and non-ferrous metals like steel, iron, tin, copper, brass, bronze, aluminum, etc. Fabrication, handling, assembling, erecting, altering, repairing, etc. of architectural metal roof, standing seam roof, composite metal roof, metal and composite bathroom/toilet partitions, aluminum gutters, metal and composite lockers and shelving, kitchen equipment, and walk-in coolers. To include testing and air –balancing ancillary to installation and construction.

- ***SPRINKLER FITTERS***

Installation, alteration, maintenance and repair of fire protection sprinkler systems. ***License required per Connecticut General Statutes: F-1,2,3,4.***

- ***TILE MARBLE AND TERRAZZO FINISHERS***

Assists and tends the tile setter, marble mason and terrazzo worker in the performance of their duties.

- **TRUCK DRIVERS**

~How to pay truck drivers delivering asphalt is under REVISION~

Truck Drivers are requires to be paid prevailing wage for time spent "working" directly on the site. These drivers remain covered by the prevailing wage for any time spent transporting between the actual construction location and facilities (such as fabrication, plants, mobile factories, batch plant, borrow pits, job headquarters, tool yards, etc.) dedicated exclusively, or nearly so, to performance of the contract or project, which are so located in proximity to the actual construction location that it is reasonable to include them. ***License required, drivers only, per Connecticut General Statutes.***

For example:

• Material men and deliverymen are not covered under prevailing wage as long as they are not directly involved in the construction process. If, they unload the material, they would then be covered by prevailing wage for the classification they are performing work in: laborer, equipment operator, etc.
• Hauling material off site is not covered provided they are not dumping it at a location outlined above.
• Driving a truck on site and moving equipment or materials on site would be considered covered work, as this is part of the construction process.

➢ *Any questions regarding the proper classification should be directed to:*

Public Contract Compliance Unit
Wage and Workplace Standards Division
Connecticut Department of Labor
200 Folly Brook Blvd, Wethersfield, CT 06109
(860) 263-6543.

November 29, 2006

Notice

To All Mason Contractors and Interested Parties Regarding Construction Pursuant to Section 31-53 of the Connecticut General Statutes (Prevailing Wage)

The Connecticut Labor Department Wage and Workplace Standards Division is empowered to enforce the prevailing wage rates on projects covered by the above referenced statute.

Over the past few years the Division has withheld enforcement of the rate in effect for workers who operate a forklift on a prevailing wage rate project due to a potential jurisdictional dispute.

The rate listed in the schedules and in our Occupational Bulletin (see enclosed) has been as follows:

Forklift Operator:

- **Laborers (Group 4) Mason Tenders -** operates forklift solely to assist a mason to a maximum height of nine feet only.

- **Power Equipment Operator (Group 9) -** operates forklift to assist any trade and to assist a mason to a height over nine feet.

The U.S. Labor Department conducted a survey of rates in Connecticut but it has not been published and the rate in effect remains as outlined in the above Occupational Bulletin.

Since this is a classification matter and not one of jurisdiction, effective January 1, 2007 the Connecticut Labor Department will enforce the rate on each schedule in accordance with our statutory authority.

Your cooperation in filing appropriate and accurate certified payrolls is appreciated.

Opportunity ★ Guidance ★ Support

CONNECTICUT DEPARTMENT OF LABOR

THIS IS A PUBLIC WORKS PROJECT

Covered by the

PREVAILING WAGE LAW

CT General Statutes Section 31-53

If you have QUESTIONS regarding your wages
CALL (860) 263-6790

Section 31-55 of the CT State Statutes requires every contractor or subcontractor performing work for the state to post in a prominent place the prevailing wages as determined by the Labor Commissioner.

[New] In accordance with Section 31-53b(a) of the C.G.S. each contractor shall provide a copy of the OSHA 10 Hour Construction Safety and Health Card for each employee, to be attached to the first certified payroll on the project.

In accordance with Connecticut General Statutes, 31-53
Certified Payrolls with a statement of compliance
shall be submitted monthly to the contracting agency.

PAYROLL CERTIFICATION FOR PUBLIC WORKS PROJECTS

WEEKLY PAYROLL

Connecticut Department of Labor
Wage and Workplace Standards Division
200 Folly Brook Blvd.
Wethersfield, CT 06109

CONTRACTOR NAME AND ADDRESS:

SUBCONTRACTOR NAME & ADDRESS

WORKER'S COMPENSATION INSURANCE CARRIER

POLICY #

EFFECTIVE DATE:
EXPIRATION DATE:

PAYROLL NUMBER	Week-Ending Date	PROJECT NAME & ADDRESS

PERSON/WORKER, ADDRESS and SECTION	APPR RATE %	MALE/ FEMALE AND RACE*	WORK CLASSIFICATION / Trade License Type & Number - OSHA 10 Certification Number	DAY AND DATE S	M	T	W	TH	F	S	Total ST Hours / Total O/T Hours	BASE HOURLY RATE / TOTAL FRINGE BENEFIT PLAN CASH	TYPE OF FRINGE BENEFITS Per Hour 1 through 6 (see back)	GROSS PAY FOR ALL WORK PERFORMED THIS WEEK	TOTAL DEDUCTIONS FICA	FEDERAL WITH-HOLDING	STATE WITH-HOLDING	LIST OTHER	GROSS PAY FOR THIS PREVAILING RATE JOB	CHECK # AND NET PAY
				HOURS WORKED EACH DAY																
												$ Base Rate	1. $ 2. $ 3. $							
												$ Cash Fringe	4. $ 5. $ 6. $							
												$ Base Rate	1. $ 2. $ 3. $							
												$ Cash Fringe	4. $ 5. $ 6. $							
												$ Base Rate	1. $ 2. $ 3. $							
												$ Cash Fringe	4. $ 5. $ 6. $							
												$ Base Rate	1. $ 2. $ 3. $							
												$ Cash Fringe	4. $ 5. $ 6. $							

12/9/2013 *IF REQUIRED
WWS-CP1

*SEE REVERSE SIDE

PAGE NUMBER _____OF

OSHA 10 ~ATTACH CARD TO 1ST CERTIFIED PAYROLL

***FRINGE BENEFITS EXPLANATION (P):**

Bona fide benefits paid to approved plans, funds or programs, except those required by Federal or State Law (unemployment tax, worker's compensation, income taxes, etc.).

Please specify the type of benefits provided:

1) Medical or hospital care _____ 4) Disability_____

2) Pension or retirement _____ 5) Vacation, holiday_____

3) Life Insurance _____ 6) Other (please specify) _____

CERTIFIED STATEMENT OF COMPLIANCE

For the week ending date of _____,

I, _____of _____, (hereafter known as

Employer) in my capacity as _____ (title) do hereby certify and state:

Section A:

1. All persons employed on said project have been paid the full weekly wages earned by them during the week in accordance with Connecticut General Statutes, section 31-53, as amended. Further, I hereby certify and state the following:

a) The records submitted are true and accurate;

b) The rate of wages paid to each mechanic, laborer or workman and the amount of payment or contributions paid or payable on behalf of each such person to any employee welfare fund, as defined in Connecticut General Statutes, section 31-53 (h), are not less than the prevailing rate of wages and the amount of payment or contributions paid or payable on behalf of each such person to any employee welfare fund, as determined by the Labor Commissioner pursuant to subsection Connecticut General Statutes, section 31-53 (d), and said wages and benefits are not less than those which may also be required by contract;

c) The Employer has complied with all of the provisions in Connecticut General Statutes, section 31-53 (and Section 31-54 if applicable for state highway construction);

d) Each such person is covered by a worker's compensation insurance policy for the duration of his employment which proof of coverage has been provided to the contracting agency;

e) The Employer does not receive kickbacks, which means any money, fee, commission, credit, gift, gratuity, thing of value, or compensation of any kind which is provided directly or indirectly, to any prime contractor, prime contractor employee, subcontractor, or subcontractor employee for the purpose of improperly obtaining or rewarding favorable treatment in connection with a prime contract or in connection with a prime contractor in connection with a subcontractor relating to a prime contractor; and

f) The Employer is aware that filing a certified payroll which he knows to be false is a class D felony for which the employer may be fined up to five thousand dollars, imprisoned for up to five years or both.

2. OSHA~The employer shall affix a copy of the construction safety course, program or training completion document to the certified payroll required to be submitted to the contracting agency for this project on which such persons name first appears.

_____	_____	_____
(Signature)	(Title)	Submitted on (Date)

*****THIS IS A PUBLIC DOCUMENT*****
*****DO NOT INCLUDE SOCIAL SECURITY NUMBERS*****

Weekly Payroll Certification For Public Works Projects (Continued)

PAYROLL CERTIFICATION FOR PUBLIC WORKS PROJECTS

Week-Ending Date:
Contractor or Subcontractor Business Name:

WEEKLY PAYROLL

PERSON/WORKER, ADDRESS and SECTION	APPR RATE %	MALE/ FEMALE AND RACE*	WORK CLASSIFICATION Trade License Type & Number - OSHA 10 Certification Number	DAY AND DATE S	M	T	W	TH	F	S	Total ST Hours Total O/T Hours	BASE HOURLY RATE TOTAL FRINGE BENEFIT PLAN CASH	TYPE OF FRINGE BENEFITS Per Hour 1 through 6 (see back)	GROSS PAY FOR ALL WORK PERFORMED THIS WEEK	TOTAL DEDUCTIONS FICA	FEDERAL WITH-HOLDING	STATE WITH-HOLDING	LIST OTHER	GROSS PAY FOR THIS PREVAILING RATE JOB	CHECK # AND NET PAY
				HOURS WORKED EACH DAY																
												$ Base Rate	1. $							
													2. $							
													3. $							
												$ Cash Fringe	4. $							
													5. $							
													6. $							
												$ Base Rate	1. $							
													2. $							
													3. $							
												$ Cash Fringe	4. $							
													5. $							
													6. $							
												$ Base Rate	1. $							
													2. $							
													3. $							
												$ Cash Fringe	4. $							
													5. $							
													6. $							
												$ Base Rate	1. $							
													2. $							
													3. $							
												$ Cash Fringe	4. $							
													5. $							
													6. $							
												$ Base Rate	1. $							
													2. $							
													3. $							
												$ Cash Fringe	4. $							
													5. $							
													6. $							

*IF REQUIRED

12/9/2013
WWS-CP2

NOTICE: THIS PAGE MUST BE ACCOMPANIED BY A COVER PAGE (FORM # WWS-CP1)

Sec. 31-53b. Construction safety and health course. New miner training program. Proof of completion required for mechanics, laborers and workers on public works projects. Enforcement. Regulations. Exceptions. (a) Each contract for a public works project entered into on or after July 1, 2009, by the state or any of its agents, or by any political subdivision of the state or any of its agents, described in subsection (g) of section 31-53, shall contain a provision requiring that each contractor furnish proof with the weekly certified payroll form for the first week each employee begins work on such project that any person performing the work of a mechanic, laborer or worker pursuant to the classifications of labor under section 31-53 on such public works project, pursuant to such contract, has completed a course of at least ten hours in duration in construction safety and health approved by the federal Occupational Safety and Health Administration or, has completed a new miner training program approved by the Federal Mine Safety and Health Administration in accordance with 30 CFR 48 or, in the case of telecommunications employees, has completed at least ten hours of training in accordance with 29 CFR 1910.268.

(b) Any person required to complete a course or program under subsection (a) of this section who has not completed the course or program shall be subject to removal from the worksite if the person does not provide documentation of having completed such course or program by the fifteenth day after the date the person is found to be in noncompliance. The Labor Commissioner or said commissioner's designee shall enforce this section.

(c) Not later than January 1, 2009, the Labor Commissioner shall adopt regulations, in accordance with the provisions of chapter 54, to implement the provisions of subsections (a) and (b) of this section. Such regulations shall require that the ten-hour construction safety and health courses required under subsection (a) of this section be conducted in accordance with federal Occupational Safety and Health Administration Training Institute standards, or in accordance with Federal Mine Safety and Health Administration Standards or in accordance with 29 CFR 1910.268, as appropriate. The Labor Commissioner shall accept as sufficient proof of compliance with the provisions of subsection (a) or (b) of this section a student course completion card issued by the federal Occupational Safety and Health Administration Training Institute, or such other proof of compliance said commissioner deems appropriate, dated no earlier than five years before the commencement date of such public works project.

(d) This section shall not apply to employees of public service companies, as defined in section 16-1, or drivers of commercial motor vehicles driving the vehicle on the public works project and delivering or picking up cargo from public works projects provided they perform no labor relating to the project other than the loading and unloading of their cargo.

(P.A. 06-175, S. 1; P.A. 08-83, S. 1.)

History: P.A. 08-83 amended Subsec. (a) by making provisions applicable to public works project contracts entered into on or after July 1, 2009, replacing provision re total cost of work with reference to Sec. 31-53(g), requiring proof in certified payroll form that new mechanic, laborer or worker has completed a 10-hour or more construction safety course and adding provision re new miner training program, amended Subsec. (b) by substituting "person" for "employee" and adding "or program", amended Subsec. (c) by adding "or in accordance with Federal Mine
Safety and Health Administration Standards" and setting new deadline of January 1, 2009, deleted former Subsec. (d) re "public building", added new Subsec. (d) re exemptions for public service company employees and delivery drivers who perform no labor other than delivery and made conforming and technical changes, effective January 1, 2009.

STATUTE 31-55a

- SPECIAL NOTICE -

To: All State and Political Subdivisions,Their Agents, and Contractors

Connecticut General Statute 31-55a - Annual adjustments to wage rates by contractors doing state work.

Each contractor that is awarded a contract on or after October 1, 2002, for (1) the construction of a state highway or bridge that falls under the provisions of section 31-54 of the general statutes, or (2) the construction, remodeling, refinishing, refurbishing, rehabilitation, alteration or repair of any public works project that falls under the provisions of section 31-53 of the general statutes shall contact the Labor Commissioner on or before July first of each year, for the duration of such contract, to ascertain the prevailing rate of wages on an hourly basis and the amount of payment or contributions paid or payable on behalf of each mechanic, laborer or worker employed upon the work contracted to be done, and shall make any necessary adjustments to such prevailing rate of wages and such payment or contributions paid or payable on behalf of each such employee, effective each July first.

- The prevailing wage rates applicable to any contract or subcontract awarded on or after October 1, 2002 are subject to annual adjustments each July 1st for the duration of any project which was originally advertised for bids on or after October 1, 2002.
- Each contractor affected by the above requirement shall pay the annual adjusted prevailing wage rate that is in effect each July 1st, as posted by the Department of Labor.
- It is the ***contractor's*** responsibility to obtain the annual adjusted prevailing wage rate increases directly from the Department of Labor's Web Site. The annual adjustments will be posted on the Department of Labor Web page: www.ctdol.state.ct.us. For those without internet access, please contact the division listed below.
- The Department of Labor will continue to issue the initial prevailing wage rate schedule to the Contracting Agency for the project. All subsequent annual adjustments will be posted on our Web Site for contractor access.

Any questions should be directed to the Contract Compliance Unit, Wage and Workplace Standards Division, Connecticut Department of Labor, 200 Folly Brook Blvd., Wethersfield, CT 06109 at (860)263-6790.

Informational Bulletin

THE 10-HOUR OSHA CONSTRUCTION SAFETY AND HEALTH COURSE

(applicable to public building contracts entered into *on or after July 1, 2007,* where the total cost of all work to be performed is at least $100,000)

(1) This requirement was created by Public Act No. 06-175, which is codified in Section 31-53b of the Connecticut General Statutes (pertaining to the prevailing wage statutes);

(2) The course is required for public building construction contracts (projects funded in whole or in part by the state or any political subdivision of the state) entered into on or after July 1, 2007;

(3) It is required of private employees (not state or municipal employees) and apprentices who perform manual labor for a general contractor or subcontractor on a public building project where the total cost of all work to be performed is at least $100,000;

(4) The ten-hour construction course pertains to the ten-hour Outreach Course conducted in accordance with federal OSHA Training Institute standards, and, for telecommunications workers, a ten-hour training course conducted in accordance with federal OSHA standard, 29 CFR 1910.268;

(5) The internet website for the federal OSHA Training Institute is http://www.osha.gov/fso/ote/training/edcenters/fact_sheet.html;

(6) The statutory language leaves it to the contractor and its employees to determine who pays for the cost of the ten-hour Outreach Course;

(7) Within 30 days of receiving a contract award, a general contractor must furnish proof to the Labor Commissioner that all employees and apprentices performing manual labor on the project will have completed such a course;

(8) Proof of completion may be demonstrated through either: (a) the presentation of a *bona fide* student course completion card issued by the federal OSHA Training Institute; *or* (2) the presentation of documentation provided to an employee by a trainer certified by the Institute pending the actual issuance of the completion card;

(9) Any card with an issuance date more than 5 years prior to the commencement date of the construction project shall not constitute proof of compliance;

(10) Each employer shall affix a copy of the construction safety course completion card to the certified payroll submitted to the contracting agency in accordance with Conn. Gen. Stat. § 31-53(f) on which such employee's name first appears;

(11) Any employee found to be in non-compliance shall be subject to removal from the worksite if such employee does not provide satisfactory proof of course completion to the Labor Commissioner by the fifteenth day after the date the employee is determined to be in noncompliance;

(12) Any such employee who is determined to be in noncompliance may continue to work on a public building construction project for a maximum of fourteen consecutive calendar days while bringing his or her status into compliance;

(13) The Labor Commissioner may make complaint to the prosecuting authorities regarding any employer or agent of the employer, or officer or agent of the corporation who files a false certified payroll with respect to the status of an employee who is performing manual labor on a public building construction project;

(14) The statute provides the minimum standards required for the completion of a safety course by manual laborers on public construction contracts; any contractor can exceed these minimum requirements; and

(15) Regulations clarifying the statute are currently in the regulatory process, and shall be posted on the CTDOL website as soon as they are adopted in final form.

(16) Any questions regarding this statute may be directed to the Wage and Workplace Standards Division of the Connecticut Labor Department via the internet website of http://www.ctdol.state.ct.us/wgwkstnd/wgemenu.htm; or by telephone at (860)263-6790.

THE ABOVE INFORMATION IS PROVIDED EXCLUSIVELY AS AN EDUCATIONAL RESOURCE, AND IS NOT INTENDED AS A SUBSTITUTE FOR LEGAL INTERPRETATIONS WHICH MAY ULTMATELY ARISE CONCERNIG THE CONSTRUCTION OF THE STATUTE OR THE REGULATIONS.

TAB H

Commission on Human Rights and Opportunities
(CHRO) Contract Compliance

Commission On Human Rights And Opportunities (CHRO) Contract Compliance

The contractor who is selected to perform this project must comply with 4a-60, 4a-60a, 4a-60g, and 46a-68b through 46a-68f, inclusive, as amended by June 2015 Special Session Public Act 15-5 of the Connecticut General Statutes (C.G.S.).

For municipal construction contracts valued over $50,000, state law requires the contractor, general contractor, or construction manager at risk to set a goal of twenty-five per cent (25%) for award to eligible subcontractors holding current small business enterprise (SBE) certification from the DAS under the provisions of C.G.S. 4a-60g. Of the portion of contracts set aside for SBEs, a goal of twenty-five percent (25%) (or 6.25% of the value of the entire contract funded by the state) must be set aside for awards to eligible contractors holding current minority business enterprise certification (i.e.: DAS certified Minority ("MBE"), Women ("WBE") and/or Disabled ("DisBE") owned businesses). The contractor, general contractor, construction manager at risk must make good faith efforts to employ minority business enterprises as subcontractors and suppliers of materials on such projects.

For Contracts Equal to or Greater than $500,000.00

The contract cannot be awarded until:

The Contractor has submitted an approved Affirmative Action Plan to CHRO

OR

Authorization has been obtained from CHRO to execute contract and retain 2% per month of the total contract value until CHRO approves the Contractor's Affirmative Action Plan.

Non-Discrimination and Affirmative Action Provisions

(A)(1) The Contractor agrees and warrants that in the performance of the Contract such Contractor will not discriminate or permit discrimination against any person or group of persons on the grounds of race, color, religious creed, age, marital status, national origin, ancestry, sex, gender identity or expression, sexual orientation, intellectual disability, mental disability or physical disability, including, but not limited to, blindness, unless it is shown by such Contractor that such disability prevents performance of the work involved, in any manner prohibited by the laws of the United States or of the state of Connecticut. The Contractor further agrees to take affirmative action to insure that applicants with job-related qualifications are employed and that employees are treated when employed without regard to of race, color, religious creed, age, marital status, national origin, ancestry, sex, gender identity or expression, intellectual disability, mental disability or physical disability, including, but not limited to, blindness, unless it is shown by such Contractor that such disability prevents performance of the work involved; (2) the Contractor agrees, in all solicitations or advertisements for employees placed by or ·on behalf of the Contractor, to state that it is an ."affirmative action-equal opportunity employer" in accordance with regulations adopted by the commission; (3) the Contractor agrees to provide each labor union or representative of workers with which such Contractor has a collective bargaining agreement or other contract or understanding and each vendor with which such Contractor has a contract or understanding, a notice to be provided by the commission advising the labor union or workers' representative of the Contractor's commitments under this section, and to post copies of the notice in conspicuous places available to employees and applicants for employment; (4) the Contractor agrees to comply with each provision of this section and sections 46a-68e and 46a-68f and with each regulation or relevant order issued by said commission pursuant to sections 46a-56, 46a-68e,46a-68f and 46a-86; (5) the Contractor agrees to provide the Commission on Human Rights and Opportunities with such information requested by the commission, and permit access to pertinent books, records and accounts, concerning the employment practices and procedures of the Contractor as relate to the provisions of this section and section 46a-56.

(B) Any Contractor who is a party to a municipal public works contract or quasi-public agency project, where any such contract is valued at less than $50,000 for each year of the contract, shall provide the Commission on Human Rights and Opportunities with a written or electronic representation that complies with the nondiscrimination agreement and warranty under subsection (A)(1) above, provided if there is any change in such representation, the Contractor shall provide the updated representation to the Commission not later than 30 days after such change. Any Contractor who is a party to a municipal public works contract or a quasi-public agency project, where any such contract is valued at $50,000 or more for any year of the contract, shall provide the Commission with any one of the following: (1) Documentation in the form of a company or corporate police adopted by resolution of the board of directors, shareholder, managers, members or other governing body of such Contractor that

complies with the nondiscrimination agreement and warranty under subsection (A)(1) of this section; (2) Documentation in the form of a company or corporate policy adopted by a prior resolution of the board of directors, shareholders, managers, members or other governing body of such contractor if (a) the prior resolution is certified by a duly authorized corporate officer of such contractor to be in effect on the date the documentation is submitted, and the executive director of the Commission on Human Rights and Opportunities or designee certifies that the prior resolution complies with the nondiscrimination agreement and warranty under subdivision (A)(1) of this section; or (3) Documentation in the form of an affidavit signed under penalty of false statement by a chief executive officer, president, chairperson or other corporate officer duly authorized to adopt company or corporate policy that certifies that the company or corporate policy of the contractor complies with the nondiscrimination agreement and warranty under subdivision (A)(1) of this section and is in effect on the date the affidavit is signed..

(C) If the Contract is a municipal public works contract or a quasi-public agency project, the Contractor agrees and warrants that s/he will make good faith efforts to employ minority business enterprises as subcontractors and suppliers of materials on such public works project. The Contractor shall include the provisions of subdivision (A)(1) of this section in every subcontract or purchase order entered into to fulfill any obligation of a municipal public works contract or contract for a quasi-public agency project, and such provisions shall be binding on a subcontractor, vendor or manufacturer, unless exempted by regulations or orders of the Commission on Human Rights and Opportunities. The Contractor shall take such action with respect to any such subcontract or purchase order as the Commission may direct as a means of enforcing such provisions, including sanctions for noncompliance in accordance with section 46a-56; provided, if such Contractor becomes involved in, or is threatened with, litigation with a subcontractor or vendor as a result of such direction by the Commission regarding a state contract, the contractor may request the state of Connecticut to enter into any such litigation or negotiation prior thereto to protect the interests of the state and the state may so enter.

(D) "Minority business enterprise" means any small contractor or supplier of materials fifty-one per cent or more of the capital stock, if any, or assets of which is owned by a person or persons: (1) Who are active in the daily affairs of the enterprise, (2) who have the power to direct the management and policies of the enterprise and (3) who are members of a minority, as such term is defined in subsection (a) of section 32-9n; and "good faith" means that degree of diligence which a reasonable person would exercise in the performance of legal duties and obligations. "Good faith efforts" shall include, but not be limited to, those reasonable initial efforts necessary to comply with statutory or regulatory requirements and additional or substituted efforts when it is determined that such initial efforts will not be sufficient to comply with such requirements. Determination of the Contractor's good faith efforts shall include, but shall not be eliminated to, the following factors: The contractor's employment and subcontracting policies, patterns and practices; affirmative advertising recruitment and training; technical assistance activities and such other reasonable activities or efforts as

the Commission on Human Rights and Opportunities may prescribe that are designed to ensure the participation of minority business enterprises in municipal public works contracts or quasi-public agency projects. "Municipal public works project" means that portion of an agreement entered into on or after October 1, 2015, between any individual, form or corporation and a municipality for the construction, rehabilitation, conversion, extension, demolition or repair of a public building, highway or other changes or improvements in real property, which is financed in whole or in part by the state, including, but not limited to, matching expenditures, grants, loans, insurance or guarantees but excluding any project of an alliance district, as defined in section 10-262u, finance by the state funding in an amount equal to fifty thousand dollars or less. "Quasi-public agency project" means the construction, rehabilitation, conversion, extension, demolition or repair of a building or other changes or improvements in real property pursuant to a contract entered into on or after October 1, 2015, which is financed in whole or in part by a quasi-public agency using state funds, including, but not limited to, matching expenditures, grants, loans, insurance or guarantees.

Commission On Human Rights And Opportunities (CHRO) Contract Compliance

The contractor who is selected to perform this project must comply with 4a-60, 4a-60a, 4a-60g, and 46a-68b through 46a-68f, inclusive, as amended by June 2015 Special Session Public Act 15-5 of the Connecticut General Statutes (C.G.S.).

For municipal construction contracts valued over $50,000, state law requires the contractor, general contractor, or construction manager at risk to set a goal of twenty-five per cent (25%) for award to eligible subcontractors holding current small business enterprise (SBE) certification from the DAS under the provisions of C.G.S. 4a-60g. Of the portion of contracts set aside for SBEs, a goal of twenty-five percent (25%) (or 6.25% of the value of the entire contract funded by the state) must be set aside for awards to eligible contractors holding current minority business enterprise certification (i.e.: DAS certified Minority ("MBE"), Women ("WBE") and/or Disabled ("DisBE") owned businesses). The contractor, general contractor, construction manager at risk must make good faith efforts to employ minority business enterprises as subcontractors and suppliers of materials on such projects.

For Contracts Equal to or Greater than $500,000.00

The contract cannot be awarded until:

The Contractor has submitted an approved Affirmative Action Plan to CHRO

OR

Authorization has been obtained from CHRO to execute contract and retain 2% per month of the total contract value until CHRO approves the Contractor's Affirmative Action Plan.

Non-Discrimination and Affirmative Action Provisions

(A)(1) The Contractor agrees and warrants that in the performance of the Contract such Contractor will not discriminate or permit discrimination against any person or group of persons on the grounds of race, color, religious creed, age, marital status, national origin, ancestry, sex, gender identity or expression, sexual orientation, intellectual disability, mental disability or physical disability, including, but not limited to, blindness, unless it is shown by such Contractor that such disability prevents performance of the work involved, in any manner prohibited by the laws of the United States or of the state of Connecticut. The Contractor further agrees to take affirmative action to insure that applicants with job-related qualifications are employed and that employees are treated when employed without regard to of race, color, religious creed, age, marital status, national origin, ancestry, sex, gender identity or expression, intellectual disability, mental disability or physical disability, including, but not limited to, blindness, unless it is shown by such Contractor that such disability prevents performance of the work involved; (2) the Contractor agrees, in all solicitations or advertisements for employees placed by or ·on behalf of the Contractor, to state that it is an ."affirmative action-equal opportunity employer" in accordance with regulations adopted by the commission; (3) the Contractor agrees to provide each labor union or representative of workers with which such Contractor has a collective bargaining agreement or other contract or understanding and each vendor with which such Contractor has a contract or understanding, a notice to be provided by the commission advising the labor union or workers' representative of the Contractor's commitments under this section, and to post copies of the notice in conspicuous places available to employees and applicants for employment; (4) the Contractor agrees to comply with each provision of this section and sections 46a-68e and 46a-68f and with each regulation or relevant order issued by said commission pursuant to sections 46a-56, 46a-68e,46a-68f and 46a-86; (5) the Contractor agrees to provide the Commission on Human Rights and Opportunities with such information requested by the commission, and permit access to pertinent books, records and accounts, concerning the employment practices and procedures of the Contractor as relate to the provisions of this section and section 46a-56.

(B) Any Contractor who is a party to a municipal public works contract or quasi-public agency project, where any such contract is valued at less than $50,000 for each year of the contract, shall provide the Commission on Human Rights and Opportunities with a written or electronic representation that complies with the nondiscrimination agreement and warranty under subsection (A)(1) above, provided if there is any change in such representation, the Contractor shall provide the updated representation to the Commission not later than 30 days after such change. Any Contractor who is a party to a municipal public works contract or a quasi-public agency project, where any such contract is valued at $50,000 or more for any year of the contract, shall provide the Commission with any one of the following: (1) Documentation in the form of a company or corporate police adopted by resolution of the board of directors, shareholder, managers, members or other governing body of such Contractor that

complies with the nondiscrimination agreement and warranty under subsection (A)(1) of this section; (2) Documentation in the form of a company or corporate policy adopted by a prior resolution of the board of directors, shareholders, managers, members or other governing body of such contractor if (a) the prior resolution is certified by a duly authorized corporate officer of such contractor to be in effect on the date the documentation is submitted, and the executive director of the Commission on Human Rights and Opportunities or designee certifies that the prior resolution complies with the nondiscrimination agreement and warranty under subdivision (A)(1) of this section; or (3) Documentation in the form of an affidavit signed under penalty of false statement by a chief executive officer, president, chairperson or other corporate officer duly authorized to adopt company or corporate policy that certifies that the company or corporate policy of the contractor complies with the nondiscrimination agreement and warranty under subdivision (A)(1) of this section and is in effect on the date the affidavit is signed..

(C) If the Contract is a municipal public works contract or a quasi-public agency project, the Contractor agrees and warrants that s/he will make good faith efforts to employ minority business enterprises as subcontractors and suppliers of materials on such public works project. The Contractor shall include the provisions of subdivision (A)(1) of this section in every subcontract or purchase order entered into to fulfill any obligation of a municipal public works contract or contract for a quasi-public agency project, and such provisions shall be binding on a subcontractor, vendor or manufacturer, unless exempted by regulations or orders of the Commission on Human Rights and Opportunities. The Contractor shall take such action with respect to any such subcontract or purchase order as the Commission may direct as a means of enforcing such provisions, including sanctions for noncompliance in accordance with section 46a-56; provided, if such Contractor becomes involved in, or is threatened with, litigation with a subcontractor or vendor as a result of such direction by the Commission regarding a state contract, the contractor may request the state of Connecticut to enter into any such litigation or negotiation prior thereto to protect the interests of the state and the state may so enter.

(D) "Minority business enterprise" means any small contractor or supplier of materials fifty-one per cent or more of the capital stock, if any, or assets of which is owned by a person or persons: (1) Who are active in the daily affairs of the enterprise, (2) who have the power to direct the management and policies of the enterprise and (3) who are members of a minority, as such term is defined in subsection (a) of section 32-9n; and "good faith" means that degree of diligence which a reasonable person would exercise in the performance of legal duties and obligations. "Good faith efforts" shall include, but not be limited to, those reasonable initial efforts necessary to comply with statutory or regulatory requirements and additional or substituted efforts when it is determined that such initial efforts will not be sufficient to comply with such requirements. Determination of the Contractor's good faith efforts shall include, but shall not be eliminated to, the following factors: The contractor's employment and subcontracting policies, patterns and practices; affirmative advertising recruitment and training; technical assistance activities and such other reasonable activities or efforts as

the Commission on Human Rights and Opportunities may prescribe that are designed to ensure the participation of minority business enterprises in municipal public works contracts or quasi-public agency projects. "Municipal public works project" means that portion of an agreement entered into on or after October 1, 2015, between any individual, form or corporation and a municipality for the construction, rehabilitation, conversion, extension, demolition or repair of a public building, highway or other changes or improvements in real property, which is financed in whole or in part by the state, including, but not limited to, matching expenditures, grants, loans, insurance or guarantees but excluding any project of an alliance district, as defined in section 10-262u, finance by the state funding in an amount equal to fifty thousand dollars or less. "Quasi-public agency project" means the construction, rehabilitation, conversion, extension, demolition or repair of a building or other changes or improvements in real property pursuant to a contract entered into on or after October 1, 2015, which is financed in whole or in part by a quasi-public agency using state funds, including, but not limited to, matching expenditures, grants, loans, insurance or guarantees.

COMMISSION ON HUMAN RIGHTS AND OPPORTUNITIES
CONTRACT COMPLIANCE REGULATIONS
NOTIFICATION TO BIDDERS

(Revised 09/3/15)

The contract to be awarded is subject to contract compliance requirements mandated by Sections 4a-60 and 4a-60a of the Connecticut General Statutes; and, when the awarding agency is the State, Sections 46a-71(d) and 46a-81i(d) of the Connecticut General Statutes. There are Contract Compliance Regulations codified at Section 46a-68j-21 through 43 of the Regulations of Connecticut State Agencies, which establish a procedure for awarding all contracts covered by Sections 4a-60 and 46a-71(d) of the Connecticut General Statutes.

According to Section 46a-68j-30(9) of the Contract Compliance Regulations, every agency awarding a contract subject to the contract compliance requirements has an obligation to "aggressively solicit the participation of legitimate minority business enterprises as bidders, contractors, subcontractors and suppliers of materials." "Minority business enterprise" is defined in Section 4a-60 of the Connecticut General Statutes as a business wherein fifty-one percent or more of the capital stock, or assets belong to a person or persons: "(1) Who are active in daily affairs of the enterprise; (2) who have the power to direct the management and policies of the enterprise; and (3) who are members of a minority, as such term is defined in subsection (a) of Section 32-9n." "Minority" groups are defined in Section 32-9n of the Connecticut General Statutes as "(1) Black Americans . . . (2) Hispanic Americans . . . (3) persons who have origins in the Iberian Peninsula . . . (4)Women . . . (5) Asian Pacific Americans and Pacific Islanders; (6) American Indians . . ." An individual with a disability is also a minority business enterprise as provided by Section 4a-60g of the Connecticut General Statutes. The above definitions apply to the contract compliance requirements by virtue of Section 46a-68j-21(11) of the Contract Compliance Regulations.

The awarding agency will consider the following factors when reviewing the bidder's qualifications under the contract compliance requirements:

(a) the bidder's success in implementing an affirmative action plan;
(b) the bidder's success in developing an apprenticeship program complying with Sections 46a-68-1 to 46a-68-17 of the Administrative Regulations of Connecticut State Agencies, inclusive;
(c) the bidder's promise to develop and implement a successful affirmative action plan;
(d) the bidder's submission of employment statistics contained in the "Employment Information Form", indicating that the composition of its workforce is at or near parity when compared to the racial and sexual composition of the workforce in the relevant labor market area; and
(e) the bidder's promise to set aside a portion of the contract for legitimate minority business enterprises. See Section 46a-68j-30(10)(E) of the Contract Compliance Regulations.

INSTRUCTIONS AND OTHER INFORMATION

The following BIDDER CONTRACT COMPLIANCE MONITORING REPORT must be completed in full, signed, and submitted with the bid for this contract. The contract awarding agency and the Commission on Human Rights and Opportunities will use the information contained thereon to determine the bidders compliance to Sections 4a-60 and 4a-60a CONN. GEN. STAT., and Sections 46a-68j-23 of the Regulations of Connecticut State Agencies regarding equal employment opportunity, and the bidder's good faith efforts to include minority business enterprises as subcontractors and suppliers for the work of the contract.

1) Definition of Small Contractor

Section 4a-60g CONN. GEN. STAT. defines a small contractor as a company that has been doing business under the same management and control and has maintained its principal place of business in Connecticut for a one year period immediately prior to its application for certification under this section, had gross revenues not exceeding fifteen million dollars in the most recently completed fiscal year, and at least fifty-one percent of the ownership of which is held by a person or persons who are active in the daily affairs of the company, and have the power to direct the management and policies of the company, except that a nonprofit corporation shall be construed to be a small contractor if such nonprofit corporation meets the requirements of subparagraphs (A) and (B) of subdivision 4a-60g CONN. GEN. STAT.

MANAGEMENT: Managers plan, organize, direct, and control the major functions of an organization through subordinates who are at the managerial or supervisory level. They make policy decisions and set objectives for the company or departments. They are not usually directly involved in production or providing services. Examples include top executives, public relations managers, managers of operations specialties (such as financial, human resources, or purchasing managers), and construction and engineering managers.

BUSINESS AND FINANCIAL OPERATIONS: These occupations include managers and professionals who work with the financial aspects of the business. These occupations include accountants and auditors, purchasing agents, management analysts, labor relations specialists, and budget, credit, and financial analysts.

MARKETING AND SALES: Occupations related to the act or process of buying and selling products and/or services such as sales engineer, retail sales workers and sales representatives including wholesale.

LEGAL OCCUPATIONS: In-House Counsel who is charged with providing legal advice and services in regards to legal issues that may arise during the course of standard business practices. This category also includes assistive legal occupations such as paralegals, legal assistants.

COMPUTER SPECIALISTS: Professionals responsible for the computer operations within a company are grouped in this category. Examples of job titles in this category include computer programmers, software engineers, database administrators, computer scientists,systems analysts, and computer support specialists

ARCHITECTURE AND ENGINEERING: Occupations related to architecture, surveying, engineering, and drafting are included in this category. Some of the job titles in this category include electrical and electronic engineers, surveyors, architects, drafters, mechanical engineers, materials engineers, mapping technicians, and civil engineers.

OFFICE AND ADMINISTRATIVE SUPPORT: All clerical-type work is included in this category. These jobs involve the preparing, transcribing, and preserving of written communications and records; collecting accounts; gathering and distributing information; operating office machines and electronic data processing equipment; and distributing mail. Job titles listed in this category include telephone operators, bill and account collectors, customer service representatives, dispatchers, secretaries and administrative assistants, computer operators and clerks (such as payroll, shipping, stock, mail and file).

BUILDING AND GROUNDS CLEANING AND MAINTENANCE: This category includes occupations involving landscaping, housekeeping, and janitorial services. Job titles found in this category include supervisors of landscaping or housekeeping, janitors, maids, grounds maintenance workers, and pest control workers.

CONSTRUCTION AND EXTRACTION: This category includes construction trades and related occupations. Job titles found in this category include boilermakers, masons (all types), carpenters, construction laborers, electricians, plumbers (and related trades), roofers, sheet metal workers, elevator installers, hazardous materials removal workers, paperhangers, and painters. Paving, surfacing, and tamping equipment operators; drywall and ceiling tile installers; and carpet, floor and tile installers and finishers are also included in this category. First line supervisors, foremen, and helpers in these trades are also grouped in this category..

INSTALLATION, MAINTENANCE AND REPAIR: Occupations involving the installation, maintenance, and repair of equipment are included in this group. Examples of job titles found here are heating, ac, and refrigeration mechanics and installers; telecommunication line installers and repairers; heavy vehicle and mobile equipment service technicians and mechanics; small engine mechanics; security and fire alarm systems installers; electric/electronic repair, industrial, utility and transportation equipment; millwrights; riggers; and manufactured building and mobile home installers. First line supervisors, foremen, and helpers for these jobs are also included in the category.

MATERIAL MOVING WORKERS: The job titles included in this group are Crane and tower operators; dredge, excavating, and lading machine operators; hoist and winch operators; industrial truck and tractor operators; cleaners of vehicles and equipment; laborers and freight, stock, and material movers, hand; machine feeders and offbearers; packers and packagers, hand; pumping station operators; refuse and recyclable material collectors; and miscellaneous material moving workers.

PRODUCTION WORKERS: The job titles included in this category are chemical production machine setters, operators and tenders; crushing/grinding workers; cutting workers; inspectors, testers sorters, samplers, weighers; precious stone/metal workers; painting workers; cementing/gluing machine operators and tenders; etchers/engravers; molders, shapers and casters except for metal and plastic; and production workers.

3) Definition of Racial and Ethnic Terms (as used in Part IV Bidder Employment Information) (Page 3)

White (not of Hispanic Origin)- All persons having origins in any of the original peoples of Europe, North Africa, or the Middle East. Black(not of Hispanic Origin)- All persons having origins in any of the Black racial groups of Africa. Hispanic- All persons of Mexican, Puerto Rican, Cuban, Central or South American, or other Spanish culture or origin, regardless of race.	Asian or Pacific Islander- All persons having origins in any of the original peoples of the Far East, Southeast Asia, the Indian subcontinent, or the Pacific Islands. This area includes China, India, Japan, Korea, the Philippine Islands, and Samoa. American Indian or Alaskan Native- All persons having origins in any of the original peoples of North America, and who maintain cultural identification through tribal affiliation or community recognition.

BIDDER CONTRACT COMPLIANCE MONITORING REPORT

PART I - Bidder Information

Company Name Street Address City & State Chief Executive	Bidder Federal Employer Identification Number _____ Or Social Security Number_____
Major Business Activity (brief description)	Bidder Identification (response optional/definitions on page 1) -Bidder is a small contractor. Yes __No __ -Bidder is a minority business enterprise Yes __No __ (If yes, check ownership category) Black ___ Hispanic___ Asian American___ American Indian/Alaskan Native ___Iberian Peninsula___ Individual(s) with a Physical Disability___ Female ___
Bidder Parent Company (If any)	- Bidder is certified as above by State of CT Yes__ No__
Other Locations in Ct. (If any)	

PART II - Bidder Nondiscrimination Policies and Procedures

1. Does your company have a written Affirmative Action/Equal Employment Opportunity statement posted on company bulletin boards? Yes__ No__	7. Do all of your company contracts and purchase orders contain non-discrimination statements as required by Sections 4a-60 & 4a-60a Conn. Gen. Stat.? Yes__ No__
2. Does your company have the state-mandated sexual harassment prevention in the workplace policy posted on company bulletin boards? Yes__ No__	8. Do you, upon request, provide reasonable accommodation to employees, or applicants for employment, who have physical or mental disability? Yes__ No__
3. Do you notify all recruitment sources in writing of your company's Affirmative Action/Equal Employment Opportunity employment policy? Yes__ No__	9. Does your company have a mandatory retirement age for all employees? Yes__ No__
4. Do your company advertisements contain a written statement that you are an Affirmative Action/Equal Opportunity Employer? Yes __No __	10. If your company has 50 or more employees, have you provided at least two (2) hours of sexual harassment training to all of your supervisors? Yes__ No__ NA__
5. Do you notify the Ct. State Employment Service of all employment openings with your company? Yes __No __	11. If your company has apprenticeship programs, do they meet the Affirmative Action/Equal Employment Opportunity requirements of the apprenticeship standards of the Ct. Dept. of Labor? Yes __No __NA __
6. Does your company have a collective bargaining agreement with workers? Yes__ No__ 6a. If yes, do the collective bargaining agreements contain non-discrim ination clauses covering all workers? Yes__ No__ 6b. Have you notified each union in writing of your commitments under the nondiscrimination requirements of contracts with the state of Ct? Yes__ No__	12. Does your company have a written affirmative action Plan? Yes __No __ If no, please explain. 13. Is there a person in your company who is responsible for equal employment opportunity? Yes __No __ If yes, give name and phone number. _____

Part III - Bidder Subcontracting Practices

1. Will the work of this contract include subcontractors or suppliers? Yes__ No___

1a. If yes, please list all subcontractors and suppliers and report if they are a small contractor and/or a minority business enterprise. (defined on page 1 / use additional sheet if necessary)

1b. Will the work of this contract require additional subcontractors or suppliers other than those identified in 1a. above? Yes__ No__

PART IV - Bidder Employment Information

Date:

JOB CATEGORY *	OVERALL TOTALS	WHITE (not of Hispanic origin)		BLACK (not of Hispanic origin)		HISPANIC		ASIAN or PACIFIC ISLANDER		AMERICAN INDIAN or ALASKAN NATIVE	
		Male	Female	Male	Female	Male	Female	Male	Female	male	female
Management											
Business & Financial Ops											
Marketing & Sales											
Legal Occupations											
Computer Specialists											
Architecture/Engineering											
Office & Admin Support											
Bldg/ Grounds Cleaning/Maintenance											
Construction & Extraction											
Installation , Maintenance & Repair											
Material Moving Workers											
Production Occupations											
TOTALS ABOVE											
Total One Year Ago											
FORMAL ON THE JOB TRAINEES (ENTER FIGURES FOR THE SAME CATEGORIES AS ARE SHOWN ABOVE)											
Apprentices											
Trainees											

*NOTE: JOB CATEGORIES CAN BE CHANGED OR ADDED TO (EX. SALES CAN BE ADDED OR REPLACE A CATEGORY NOT USED IN YOUR COMPANY)

1. Which of the following recruitment sources are used by you? (Check yes or no, and report percent used)

SOURCE	YES	NO	% of applicants provided by source
State Employment Service			
Private Employment Agencies			
Schools and Colleges			
Newspaper Advertisement			
Walk Ins			
Present Employees			
Labor Organizations			
Minority/Community Organizations			
Others (please identify)			

2. Check (X) any of the below listed requirements that you use as a hiring qualification

(X)	
	Work Experience
	Ability to Speak or Write English
	Written Tests
	High School Diploma
	College Degree
	Union Membership
	Personal Recommendation
	Height or Weight
	Car Ownership
	Arrest Record
	Wage Garnishments

3. Describe below any other practices or actions that you take which show that you hire, train, and promote employees without discrimination

Certification (Read this form and check your statements on it CAREFULLY before signing). I certify that the statements made by me on this BIDDER CONTRACT COMPLIANCE MONITORING REPORT are complete and true to the best of my knowledge and belief, and are made in good faith. I understand that if I knowingly make any misstatements of facts, I am subject to be declared in non-compliance with Section 4a-60, 4a-60a, and related sections of the CONN. GEN. STAT.

(Signature)	(Title)	(Date Signed)	(Telephone)

TAB I

Plans

SITE DEVELOPMENT PLANS

FOR THE

NEW LONDON MULTI-USE TRAIL

NEW LONDON, CT

PREPARED FOR

CITY OF NEW LONDON
NEW LONDON CITY HALL

181 STATE STREET
NEW LONDON CT 06320

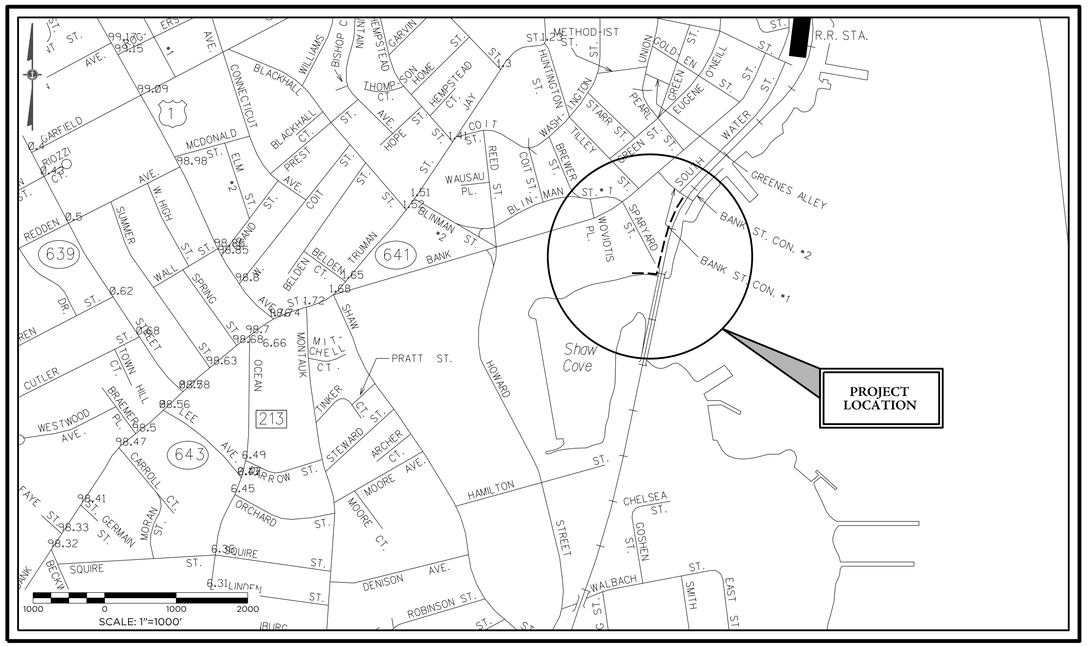

LOCATION MAP
SCALE: 1" = 1000'

LIST OF SHEETS

DATE: 2/23/21
REVISED:

LAYOUT & GRADING PLAN & PROFILES (ALTERNATE BID)	1
LAYOUT & GRADING PLAN & PROFILES (BASE BID)	2
DETAILED PLAN ENLARGEMENTS	3
SITE DEVELOPMENT DETAILS	4
SITE DEVELOPMENT DETAILS	5
SITE DEVELOPMENT DETAILS	6

PREPARED BY:

ANCHOR Barton & Loguidice
41 Sequin Drive
Glastonbury, CT 06033
Phone: (860) 633-8770
Fax: (860) 633-5971
www.anchorengr.com
Civil Engineering • Environmental Consulting • Land Surveying • Construction Management

DEPARTMENT OF THE ARMY
US ARMY CORPS OF ENGINEERS
NEW ENGLAND DISTRICT
696 VIRGINIA ROAD
CONCORD MA 01742-2751

November 15, 2019

Engineering Division

Mr. Brian Sear
Interim Director of Public Works, City of New London
181 State Street
New London, CT 06320

Dear Mr. Sear:

This letter is in regards to the requested Section 408 review for the proposed Waterfront Park Multi-Use Trail project to be located along the U.S. Army Corps of Engineers (USACE) federally constructed Shaw's Cove Flood Damage Reduction (FDR) System in New London, CT. The Waterfront Park Multi-Use Trail will connect to the existing River Walk Extension trail and is intended to allow residents to engage in recreation activities, provide for alternate modes of transportation, improve tourism and economic development, and improve access to the system for operations and maintenance activities.

The Shaw's Cove – New London, CT FDR System consists of approximately 3,900 feet of armored dikes and concrete floodwalls protecting Shaw's Cove. The armored dikes consist of an impervious core with an outer facing of stone protection. The system also includes a pump station to remove runoff during high tide events.

The proposed project involves construction of approximately 2,340 feet of 10-foot-wide multi-use trail that runs east along the existing access road from the DDLC energy facility to Sparyard Street, then turns north and runs along the crest of the dike to the Bank Street Connector and consists of two sections: Section-I (Station 100+00 to Sparyard Street) and Section-II (Sparyard Street to the Bank Street Connector). Section-I will be constructed on a portion of the armored dike that is currently covered with an approximately 24-foot-wide crushed stone surfacing that acts as an access road. Section-I will consist of a 10-foot-wide, 5-inch-thick concrete slab embedded approximately 2 inches into the dike (through 1 inch of crushed stone surfacing and 1 inch of random fill). Section-II will be constructed on a portion of the dike crest that is currently covered with 24 inches of armor stone. A 12-foot-wide section of the armor stone will be removed and replaced with two precast concrete grade beams along either side of the armor stone excavation and a 19-inch-thick layer of compacted, processed aggregate between the grade beams. The grade beams and processed aggregate will then both be covered by a 12-foot-wide, 5-inch thick cast-in-place concrete slab. Along both sections, the concrete slab will support a pedestrian guide rail system.

The USACE New England District reviewed the information supplied in the following documents:

a. Letter titled "Waterfront Park Multi-Use Trail at Shaw's Cove, New London, CT" prepared by Anchor Engineering Services Incorporated, dated April 19, 2018.

b. Submittal titled "USACE Section 408 Permit Application for the Waterfront Park Multi-Use Trail at Shaw's Cove" prepared by Anchor Engineering Services Incorporated, dated April 19, 2018.

c. Submittal titled "Site Plans for the New London Multi-Use Trail New London, CT" prepared by Anchor Engineering Services Incorporated, dated March 19, 2018.

Based on the information supplied above, it is the opinion of USACE that the proposed Waterfront Park Multi-Use Trail project, as presented in the documents above, does not require a Section 408 approval. The proposed project does not alter the function of the existing FDR System identified above and should not adversely affect the operation of the FDR System, provided that no damage, collapse, or impacts to the structural integrity of the FDR System and the associated appurtenances occurs during the construction activities of the project. Any damages to the system incurred during construction shall be immediately repaired to the satisfaction of USACE so as to not affect the safety of the public due to flooding.

This acceptance of the above referenced project is contingent upon adhering to the following comments:

- The City shall perform pre- and post-construction surveys of the levee and provide the results to USACE to demonstrate that the design elevation has been maintained.
- Provide a detail of the guide rail system showing the connection method to the concrete slab. From the information provided, it not clear how the guide rail system will be connected to the concrete slab, and whether it is readily removable for emergency operations and maintenance actions.
- Provide a detail with sections for the transitions of the path at the start and end of Section B-B' (approximately STA 105+00 to STA 106+00 and 109+00 to 110+00) showing the details of the additional material that will need to be added to support the concrete slab.
- No landscape plantings of any type shall be allowed within 15-feet of the levee or channel embankments. Above ground planters are acceptable, provided they do not hinder operations and maintenance of the systems. All existing vegetation, excluding grass, on or within 15-feet of the toe of the levee embankments and within the City's maintenance easement limits shall be removed, per the requirements of Engineering Pamphlet (EP) 1110-2-18. Areas where vegetation has been removed shall be reseeded with an appropriate grass mixture.
- Prior to the start of construction, an Emergency Action Plan (EAP) shall be developed and submitted to USACE for approval. All construction work will be subject to conditions of the EAP, such that the City is monitoring river levels and prepared to take precautionary or emergency measures to prevent damage due to flooding during construction and avoid construction equipment being in the floodway during a high water event. It is recommended that the City coordinate the development of the EAP with USACE prior to submittal. USACE will provide examples of acceptable EAP formats upon request.
- Within 90 days of the completion of the project, the city of New London shall provide USACE with one electronic copy (PDF format) of all reports and any other pertinent information (construction quality assurance reports, QA/QC checklists, daily construction records, submittals, and as-built drawings) requested by the USACE showing the work has been completed. The documents shall be signed and sealed by a professional engineer/land surveyor, as applicable.
- Access to the FDR Systems shall be maintained at all times for the duration of the project. Any damages to the systems or their components, including but not limited to the levee embankments, channel, or other appurtenant system components shall be immediately repaired to the satisfaction of USACE so as to not affect the safety of the public due to flooding.
- All vertical data shall be in North American Vertical Datum of 1988 (NAVD88), which is the current orthometric vertical reference datum within the National Spatial Reference System. We also request that the vertical datum be referenced to the older, superseded, NGVD29 to establish the relationship with the original design reference datum.
- Any changes or amendments to the above referenced documents or drawings shall be submitted to USACE for acceptance *prior* to implementation. Note that potential changes may result in the project requiring a Section 408 approval. Additionally, USACE reserves the right to require any and all project submittals for review and acceptance.
- The issuance of this action does not relieve the city of New London from its obligation to obtain any other federal, state, or local approvals or permits as may be required for this project, including but not limited to, Section 10 and Section 404 permits

USACE reserves the right and authority to request removal of any components of the system, if such components do not conform to regulations, policies, or guidance or if such components present an adverse impact to the FDR System. If a potential situation

arises between the Waterfront Park Multi-Use Trail project and the FDR System, USACE will work with the city of New London to develop potential solutions to address the concern. The Waterfront Park Multi-Use Trail project and appurtenances for the FDR System are classified as betterments and are not eligible for Public Law 84-99 rehabilitation assistance within the USACE Rehabilitation Program (RIP). Any damages to these areas during a flood event shall be repaired immediately.

Be assured that USACE holds life and public safety paramount with regards to protecting the communities behind the Shaw's Cove – New London, CT FDR Systems. Should you have any further questions or concerns, please feel free to contact Alex Gameau at (978) 318-8389.

Sincerely,

DIROCCO.KEVIN.J.1500562834 Digitally signed by DIROCCO.KEVIN.J.1500562834 Date: 2019.11.19 13:20:54 -05'00'

Kevin DiRocco, P.E.
Levee Safety Program Manager

Copy Furnished:

Kevin R. Grindle, ASLA, PLA
Senior Landscape Architect / Associate
Anchor Engineering Services, Inc.
41 Sequin Drive
Glastonbury, CT 06033

Project No. 214-09

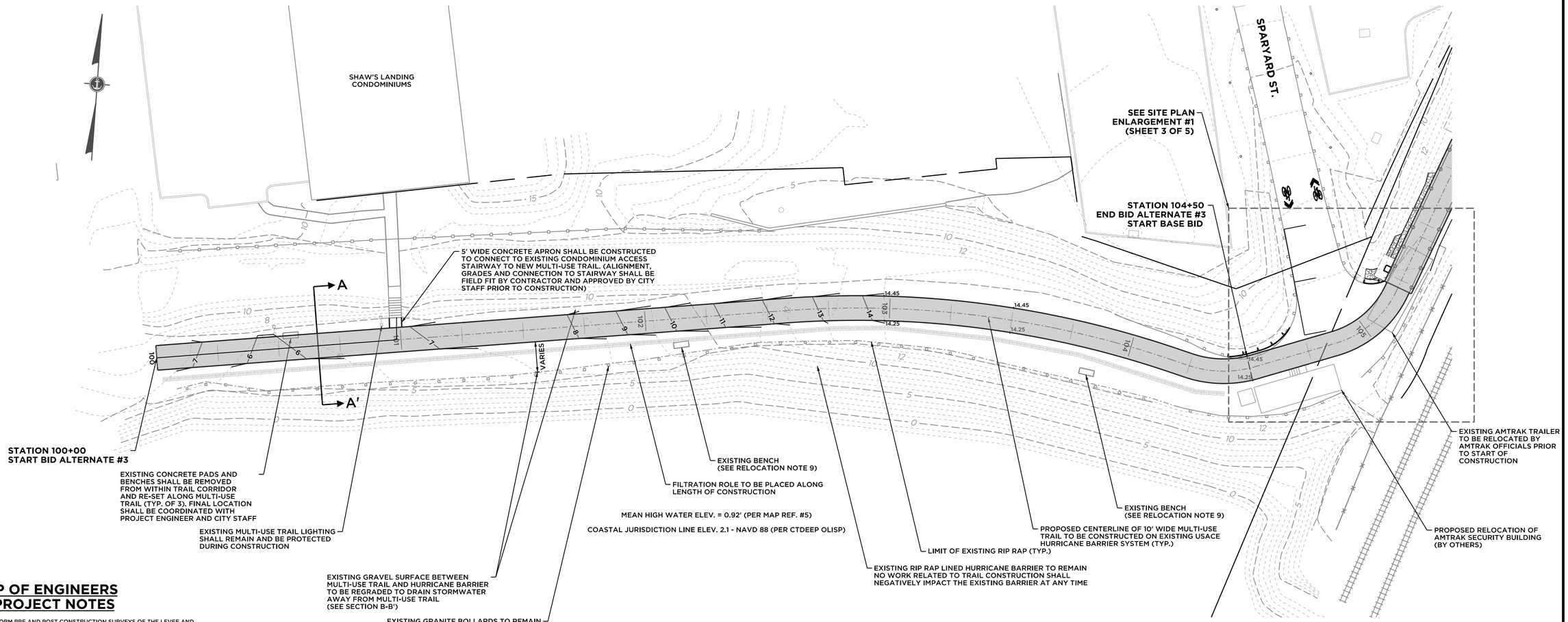

ADDITIONAL MULTI-USE TRAIL STA. 100+00 TO 104+50 (BID ALTERNATE #3)

SCALE 1"=20'

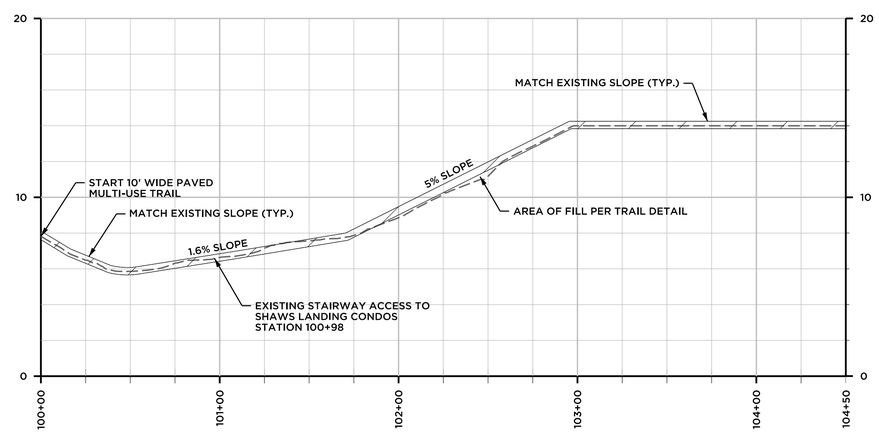

BID ALTERNATE #3 PROFILE

SCALE 1"=44' VERT.
1"=40' HORZ.

ARMY CORP OF ENGINEERS GENERAL PROJECT NOTES

1. THE CITY SHALL PERFORM PRE AND POST CONSTRUCTION SURVEYS OF THE LEVEE AND PROVIDE THE RESULTS TO USACE TO DEMONSTRATE THAT THE DESIGN ELEVATION HAS BEEN MAINTAINED.
2. NO LANDSCAPE PLANTINGS OF ANY TYPE SHALL BE ALLOWED WITHIN 15-FEET OF THE LEVEE OR CHANNEL EMBANKMENTS. ABOVE GROUND PLANTERS ARE ACCEPTABLE, PROVIDED THEY DO NOT HINDER OPERATIONS AND MAINTENANCE OF THE SYSTEMS. ALL EXISTING VEGETATION, EXCLUDING GRASS, ON OR WITHIN 15-FEET OF THE TOE OF THE LEVEE EMBANKMENTS AND WITHIN THE CITY'S MAINTENANCE EASEMENT LIMITS SHALL BE REMOVED, PER THE REQUIREMENTS OF ENGINEERING PAMPHLET (EP) 1110-2-18. AREA WHERE VEGETATION HAS BEEN REMOVED SHALL BE RESEEDED WITH AN APPROPRIATE GRASS MIXTURE.
3. PRIOR TO THE START OF CONSTRUCTION, AN EMERGENCY ACTION PLAN (EAP) SHALL BE DEVELOPED AND SUBMITTED TO USACE FOR APPROVAL. ALL CONSTRUCTION WORK WILL BE SUBJECT TO CONDITIONS OF THE EAP, SUCH THAT THE CITY IS MONITORING RIVER LEVELS AND PREPARED TO TAKE PRECAUTIONARY OR EMERGENCY MEASURES TO PREVENT DAMAGE DUE TO FLOODING DURING CONSTRUCTION AND AVOID CONSTRUCTION EQUIPMENT BEING IN THE FLOODWAY DURING A HIGH WATER EVENT. IT IS RECOMMENDED THAT THE CITY COORDINATE THE DEVELOPMENT OF THE EAP WITH USACE PRIOR TO SUBMITTAL. USACE WILL PROVIDE EXAMPLES OF ACCEPTABLE EAP FORMATS UPON REQUEST.
4. WITHIN 90 DAYS OF THE COMPLETION OF THE PROJECT, THE CITY OF NEW LONDON SHALL PROVIDE USACE WITH ONE ELECTRONIC COPY (PDF FORMAT) OF ALL REPORTS AND ANY OTHER PERTINENT INFORMATION (CONSTRUCTION QUALITY ASSURANCE REPORTS, QA/QC CHECKLISTS, DAILY CONSTRUCTION RECORDS, SUBMITTALS, AND AS-BUILT DRAWINGS) REQUESTED BY THE USACE SHOWING THE WORK HAS BEEN COMPLETED. THE DOCUMENTS SHALL BE SIGNED AND SEALED BY A PROFESSIONAL ENGINEER/LAND SURVEYOR, AS APPLICABLE.
5. ACCESS TO THE FDR SYSTEMS SHALL BE MAINTAINED AT ALL TIMES FOR THE DURATION OF THE PROJECT. ANY DAMAGES TO THE SYSTEMS OR THEIR COMPONENTS, INCLUDING BUT NOT LIMITED TO THE LEVEE EMBANKMENTS, CHANNEL, OR OTHER APPURTENANT SYSTEM COMPONENTS SHALL BE IMMEDIATELY REPAIRED TO THE SATISFACTION OF USACE SO AS TO NOT AFFECT THE SAFETY OF THE PUBLIC DUE TO FLOODING.
6. THE ISSUANCE OF THIS ACTION DOES NOT RELIEVE THE CITY OF NEW LONDON FROM ITS OBLIGATION TO OBTAIN ANT OTHER FEDERAL, STATE, OR LOCAL APPROVALS OR PERMITS AS MAY BE REQUIRED FOR THIS PROJECT, INCLUDING BUT NOT LIMITED TO, SECTION 10 AND SECTION 404 PERMITS.
7. USACE RESERVES THE RIGHT AND AUTHORITY TO REQUEST REMOVAL OF ANY COMPONENTS OF THE SYSTEM, IF SUCH COMPONENTS DO NOT CONFORM TO REGULATIONS, POLICIES, OR GUIDANCE OR IF SUCH COMPONENTS PRESENT AN ADVERSE IMPACT TO THE FDR SYSTEM. IF A POTENTIAL SITUATION ARISES BETWEEN THE WATERFRONT PARK MULTI-USE TRAIL PROJECT AND THE FDR SYSTEM, USACE WILL WORK WITH THE CITY OF NEW LONDON TO DEVELOP POTENTIAL SOLUTIONS TO ADDRESS THE CONCERN. THE WATERFRONT PARK MULTI-USE TRAIL PROJECT AND APPURTENANCES FOR THE FDR SYSTEM ARE CLASSIFIED AS BETTERMENTS AND ARE NOT ELIGIBLE FOR PUBLIC LAW 84-99 REHABILITATION ASSISTANCE WITHIN THE USACE REHABILITATION PROGRAM (RIP). ANY DAMAGES TO THESE AREAS DURING A FLOOD EVENT SHALL BE REPAIRED IMMEDIATELY.

MAP REFERENCES & SURVEY NOTES

1) *NEW LONDON HURRICANE PROTECTION, SHAW COVE, DIKE AND WALLS PART IV PLANS , PREPARED FOR THE CITY OF NEW LONDON BY DEPARTMENT OF THE ARMY NEW ENGLAND DIVISION CORPS OF ENGINEERS, WALTHAM, MASS., DATED FEBRUARY 1982, REVISED DECEMBER 11, 1986*
2) *EXISTING CONDITIONS PLAN HURRICANE BARRIER SHAW'S COVE/ THAMES RIVER PREPARED FOR GEI CONSULTANTS, INC. HOWARD STREET, BANK STREET, SPARYARD STREET AND SOUTH WATER STREET NEW LONDON, CONNECTICUT. SCALE: 1" = 20'. DATE: NOVEMBER 10, 2011. BY: DICESARE BENTLEY. SHEETS 4 THROUGH 7 OF 7.*
3) *ELEVATIONS DEPICTED HEREON ARE BASED UPON NORTH AMERICAN VERTICAL DATUM 1988 (NGVD88). TO CONVERT FROM NAVD 88 TO NGVD 29, ADD 0.968 FT IN ELEVATION TO ALL SURVEY DATA POINTS AND OR CONTOURS.*
4) *HORIZONTAL DATUM DEPICTED HEREON IS BASED UPON GPS THROUGH SUPERIOR INSTRUMENT RTK NETWORK AS WELL AS STATIC GPS OBSERVATIONS PROCESSED THROUGH THE NATIONAL OCEANIC AND ATMOSPHERIC ADMINISTRATION ONLINE POSITIONING USER SERVICE WEBSITE (NOAA OPUS).*
5) *EXISTING CONDITIONS PLAN HURRICANE BARRIER SHAW'S COVE/ THAMES RIVER PREPARED FOR GEI CONSULTANTS, INC. HOWARD STREET, BANK STREET, SPARYARD STREET AND SOUTH WATER STREET NEW LONDON, CONNECTICUT. SCALE: 1" = 20'. DATE: NOVEMBER 10, 2011. BY: DICESARE BENTLEY. SHEETS 4 THROUGH 7 OF 7.*

CONSTRUCTION NOTES:

1. UNDERGROUND UTILITY, STRUCTURE AND FACILITY LOCATIONS DEPICTED AND NOTED HEREON HAVE BEEN COMPILED, IN PART, FROM RECORD MAPPING SUPPLIED BY THE RESPECTED UTILITY COMPANIES OR GOVERNMENT AGENCIES, FROM PAROL TESTIMONY AND FROM OTHER SOURCES. THESE LOCATIONS MUST BE CONSIDERED APPROXIMATE IN NATURE. ADDITIONALLY, OTHER SUCH FEATURES MAY EXIST ON THE SITE, THE EXISTENCE OF WHICH ARE UNKNOWN TO ANCHOR ENGINEERING SERVICES, INC., THE SIZE, LOCATION AND EXISTENCE OF ALL SUCH FEATURES MUST BE FIELD DETERMINED AND VERIFIED BY THE APPROPRIATE AUTHORITIES PRIOR TO CONSTRUCTION. CALL BEFORE YOU DIG: 1-(800) 922-4455.
2. A PRECONSTRUCTION MEETING WITH TOWN STAFF AND ACOE IS REQUIRED PRIOR TO THE START OF ANY CONSTRUCTION ACTIVITY.
3. ALL MATERIALS AND METHODS OF CONSTRUCTION WITHIN THE CITY OF NEW LONDON RIGHT-OF-WAY SHALL CONFIRM TO THE CITY OF NEW LONDON PUBLIC WORKS DEPARTMENT STANDARD DETAILS. ALL MATERIALS AND METHODS OF CONSTRUCTION WITHIN THE STATE OF CONNECTICUT RIGHT-OF WAY SHALL CONFORM TO STATE OF CONNECTICUT DEPARTMENT OF TRANSPORTATION (CTDOT) STANDARD SPECIFICATIONS FOR ROADS, BRIDGES AND INCIDENTAL CONSTRUCTION, FORM 818.
4. THE SITE SHALL BE DEVELOPED IN SUCH A MANNER AS TO MINIMIZE EROSION, BOTH DURING CONSTRUCTION AND AFTER DEVELOPMENT AND TO PREVENT SEDIMENTATION OF WATERCOURSES AND STORM DRAINAGE SYSTEMS BOTH ON AND OFF THE SITE. DISTURBED AREAS SHALL BE KEPT TO A MINIMUM AND SEEDED AS SOON AS IS PRACTICAL. ALL DISTURBED AREAS WHICH WILL NOT RECEIVE FINAL GRADING AND SEEDING SHALL BE TEMPORARILY SEEDED DURING THE FALL TO PREVENT EROSIONS DURING THE WINTER AND EARLY SPRING. REASONABLE EROSION/SEDIMENTATION CONTROLS SHALL BE USED INCLUDING, BUT NOT LIMITED TO, STAKED HAY BALES, DRAINAGE DIVERSION, TEMPORARY SEEDING, SEDIMENTATION BASINS OR CHAMBERS, WATERING AND APPLICATION OF CHEMICAL AGENTS.
5. ALL DISTURBANCES TO EXISTING HURRICANE BARRIER SHALL BE RESTORED TO ORIGINAL CONDITION.
6. ALL MATERIALS USED FOR RESTORATION SHALL MEET SPECIFICATIONS OF EXISTING MATERIAL.
7. NO MATERIAL SHALL BE REMOVED FROM BARRIER THAT CHANGES ITS EXISTING ELEVATION.
8. ALL BASE MATERIAL TO BE TESTED PRIOR TO CONSTRUCTION.
9. EXISTING CONCRETE PADS AND BENCHES SHALL BE REMOVED FROM WITHIN TRAIL CORRIDOR AND RE-SET ALONG MULTI-USE TRAIL (TYP. OF 3). FINAL LOCATION SHALL BE COORDINATED WITH PROJECT ENGINEER AND CITY STAFF

20 0 20 40 60 80
SCALE: 1"= 20'

J:\214\09\Design\PLOT_New Londondgn

ANCHOR Barton & Loguidice
41 Sequin Drive
Glastonbury, CT 06033
Phone: (860) 633-8770
Fax: (860) 633-5971
www.anchorengr.com
Civil Engineering • Environmental Consulting • Land Surveying • Construction Management

PROJ. ENGINEER	MJP
PROJ. MANAGER	KRG
OFFICE REVIEW	MLK
REVISIONS	
SCALE:	AS NOTED

LAYOUT & GRADING PLAN & PROFILE (ALT. BID)

PREPARED FOR CITY OF NEW LONDON

NEW LONDON MULTI-USE TRAIL

BANK ST. TO SOUTH WATER ST. NEW LONDON, CT

PROJECT	DATE	SHEET NO.	OF
214-09	2/23/21	1	6

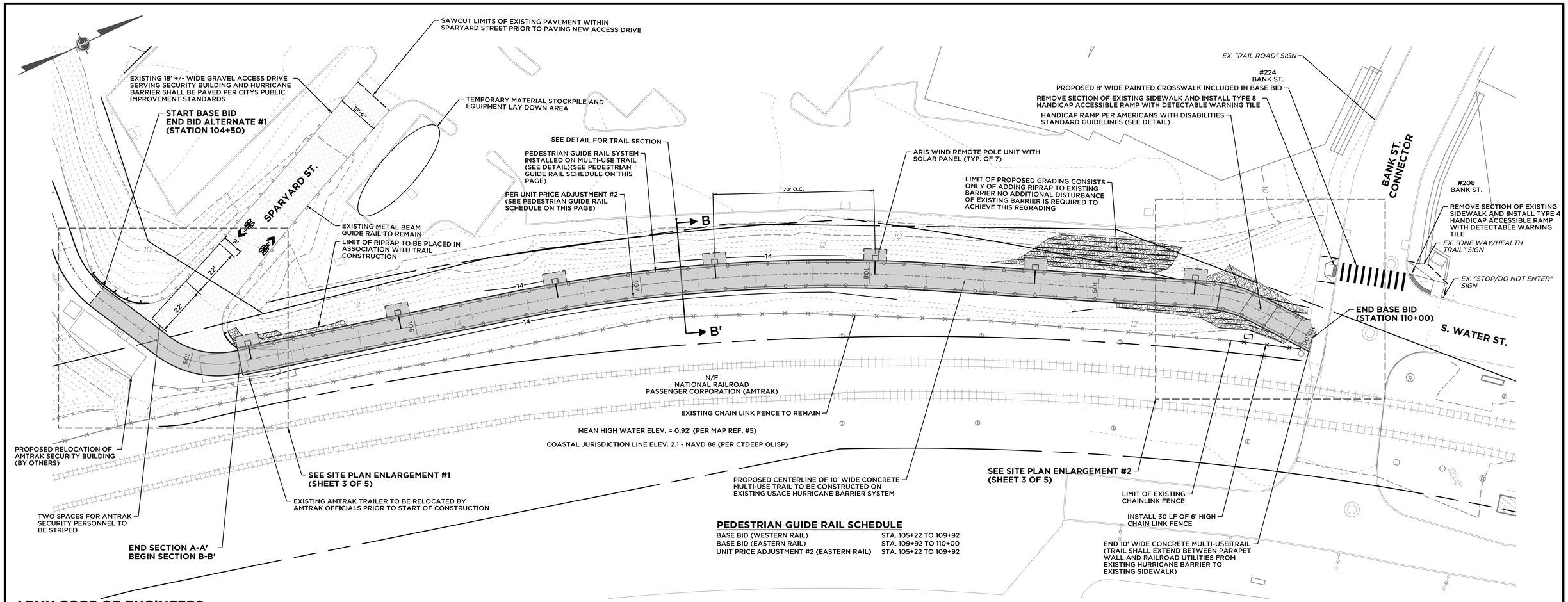

PEDESTRIAN GUIDE RAIL SCHEDULE

BASE BID (WESTERN RAIL)	STA. 105+22 TO 109+92
BASE BID (EASTERN RAIL)	STA. 109+92 TO 110+00
UNIT PRICE ADJUSTMENT #2 (EASTERN RAIL)	STA. 105+22 TO 109+92

ARMY CORP OF ENGINEERS GENERAL PROJECT NOTES

1. THE CITY SHALL PERFORM PRE AND POST CONSTRUCTION SURVEYS OF THE LEVEE AND PROVIDE THE RESULTS TO USACE TO DEMONSTRATE THAT THE DESIGN ELEVATION HAS BEEN MAINTAINED.
2. NO LANDSCAPE PLANTINGS OF ANY TYPE SHALL BE ALLOWED WITHIN 15-FEET OF THE LEVEE OR CHANNEL EMBANKMENTS. ABOVE GROUND PLANTERS ARE ACCEPTABLE, PROVIDED THEY DO NOT HINDER OPERATIONS AND MAINTENANCE OF THE SYSTEMS. ALL EXISTING VEGETATION, EXCLUDING GRASS, ON OR WITHIN 15-FEET OF THE TOE OF THE LEVEE EMBANKMENTS AND WITHIN THE CITY'S MAINTENANCE EASEMENT LIMITS SHALL BE REMOVED, PER THE REQUIREMENTS OF ENGINEERING PAMPHLET (EP) 1110-2-18. AREA WHERE VEGETATION HAS BEEN REMOVED SHALL BE RESEEDED WITH AN APPROPRIATE GRASS MIXTURE.
3. PRIOR TO THE START OF CONSTRUCTION, AN EMERGENCY ACTION PLAN (EAP) SHALL BE DEVELOPED AND SUBMITTED TO USACE FOR APPROVAL. ALL CONSTRUCTION WORK WILL BE SUBJECT TO CONDITIONS OF THE EAP, SUCH THAT THE CITY IS MONITORING RIVER LEVELS AND PREPARED TO TAKE PRECAUTIONARY OR EMERGENCY MEASURES TO PREVENT DAMAGE DUE TO FLOODING DURING CONSTRUCTION AND AVOID CONSTRUCTION EQUIPMENT BEING IN THE FLOODWAY DURING A HIGH WATER EVENT. IT IS RECOMMENDED THAT THE CITY COORDINATE THE DEVELOPMENT OF THE EAP WITH USACE PRIOR TO SUBMITTAL. USACE WILL PROVIDE EXAMPLES OF ACCEPTABLE EAP FORMATS UPON REQUEST.
4 .WITHIN 90 DAYS OF THE COMPLETION OF THE PROJECT, THE CITY OF NEW LONDON SHALL PROVIDE USACE WITH ONE ELECTRONIC COPY (PDF FORMAT) OF ALL REPORTS AND ANY OTHER PERTINENT INFORMATION (CONSTRUCTION QUALITY ASSURANCE REPORTS, QA/QC CHECKLISTS, DAILY CONSTRUCTION RECORDS, SUBMITTALS, AND AS-BUILT DRAWINGS) REQUESTED BY THE USACE SHOWING THE WORK HAS BEEN COMPLETED. THE DOCUMENTS SHALL BE SIGNED AND SEALED BY A PROFESSIONAL ENGINEER/LAND SURVEYOR, AS APPLICABLE.
5. ACCESS TO THE FDR SYSTEMS SHALL BE MAINTAINED AT ALL TIMES FOR THE DURATION OF THE PROJECT. ANY DAMAGES TO THE SYSTEMS OR THEIR COMPONENTS, INCLUDING BUT NOT LIMITED TO THE LEVEE EMBANKMENTS, CHANNEL, OR OTHER APPURTENANT SYSTEM COMPONENTS SHALL BE IMMEDIATELY REPAIRED TO THE SATISFACTION OF USACE SO AS TO NOT AFFECT THE SAFETY OF THE PUBLIC DUE TO FLOODING.
6. THE ISSUANCE OF THIS ACTION DOES NOT RELIEVE THE CITY OF NEW LONDON FROM ITS OBLIGATION TO OBTAIN ANY OTHER FEDERAL, STATE, OR LOCAL APPROVALS OR PERMITS AS MAY BE REQUIRED FOR THIS PROJECT, INCLUDING BUT NOT LIMITED TO, SECTION 10 AND SECTION 404 PERMITS.
7. USACE RESERVES THE RIGHT AND AUTHORITY TO REQUEST REMOVAL OF ANY COMPONENTS OF THE SYSTEM, IF SUCH COMPONENTS DO NOT CONFORM TO REGULATIONS, POLICIES, OR GUIDANCE OR IF SUCH COMPONENTS PRESENT AN ADVERSE IMPACT TO THE FDR SYSTEM. IF A POTENTIAL SITUATION ARISES BETWEEN THE WATERFRONT PARK MULTI-USE TRAIL PROJECT AND THE FDR SYSTEM, USACE WILL WORK WITH THE CITY OF NEW LONDON TO DEVELOP POTENTIAL SOLUTIONS TO ADDRESS THE CONCERN. THE WATERFRONT PARK MULTI-USE TRAIL PROJECT AND APPURTENANCES FOR THE FDR SYSTEM ARE CLASSIFIED AS BETTERMENTS AND ARE NOT ELIGIBLE FOR PUBLIC LAW 84-99 REHABILITATION ASSISTANCE WITHIN THE USACE REHABILITATION PROGRAM (RIP). ANY DAMAGES TO THESE AREAS DURING A FLOOD EVENT SHALL BE REPAIRED IMMEDIATELY.

MAP REFERENCES & SURVEY NOTES

1) NEW LONDON HURRICANE PROTECTION, SHAW COVE, DIKE AND WALLS PART IV PLANS , PREPARED FOR THE CITY OF NEW LONDON BY DEPARTMENT OF THE ARMY NEW ENGLAND DIVISION CORPS OF ENGINEERS, WALTHAM, MASS., DATED FEBRUARY 1982, REVISED DECEMBER 11, 1986

2) EXISTING CONDITIONS PLAN HURRICANE BARRIER SHAW'S COVE/ THAMES RIVER PREPARED FOR GEI CONSULTANTS, INC. HOWARD STREET, BANK STREET, SPARYARD STREET AND SOUTH WATER STREET NEW LONDON, CONNECTICUT. SCALE: 1" = 20'. DATE: NOVEMBER 10, 2011. BY: DICESARE BENTLEY. SHEETS 4 THROUGH 7 OF 7.

3) ELEVATIONS DEPICTED HEREON ARE BASED UPON NORTH AMERICAN VERTICAL DATUM 1988 (NGVD88). TO CONVERT FROM NAVD 88 TO NGVD 29, ADD 0.968 FT IN ELEVATION TO ALL SURVEY DATA POINTS AND OR CONTOURS.

4) HORIZONTAL DATUM DEPICTED HEREON IS BASED UPON GPS THROUGH SUPERIOR INSTRUMENT RTK NETWORK AS WELL AS STATIC GPS OBSERVATIONS PROCESSED THROUGH THE NATIONAL OCEANIC AND ATMOSPHERIC ADMINISTRATION ONLINE POSITIONING USER SERVICE WEBSITE (NOAA OPUS).

5) EXISTING CONDITIONS PLAN HURRICANE BARRIER SHAW'S COVE/ THAMES RIVER PREPARED FOR GEI CONSULTANTS, INC. HOWARD STREET, BANK STREET, SPARYARD STREET AND SOUTH WATER STREET NEW LONDON, CONNECTICUT. SCALE: 1" = 20'. DATE: NOVEMBER 10, 2011. BY: DICESARE BENTLEY. SHEETS 4 THROUGH 7 OF 7.

NEW LONDON MULTI-USE TRAIL PROJECT (BASE BID SITE PLAN)

SCALE 1"=20'

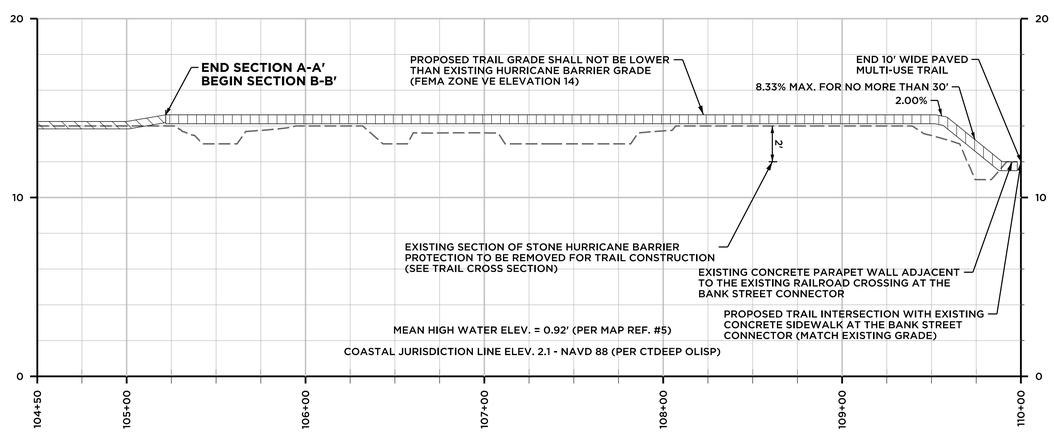

BASE BID PROFILE (104+50 TO 110+00)

SCALE 1"=4' VERT.
1"=40' HORZ.

CONSTRUCTION NOTES:

1. UNDERGROUND UTILITY, STRUCTURE AND FACILITY LOCATIONS DEPICTED AND NOTED HEREON HAVE BEEN COMPILED, IN PART, FROM RECORD MAPPING SUPPLIED BY THE RESPECTED UTILITY COMPANIES OR GOVERNMENT AGENCIES, FROM PAROL TESTIMONY AND FROM OTHER SOURCES. THESE LOCATIONS MUST BE CONSIDERED APPROXIMATE IN NATURE. ADDITIONALLY, OTHER SUCH FEATURES MAY EXIST ON THE SITE, THE EXISTENCE OF WHICH ARE UNKNOWN TO ANCHOR ENGINEERING SERVICES, INC., THE SIZE, LOCATION AND EXISTENCE OF ALL SUCH FEATURES MUST BE FIELD DETERMINED AND VERIFIED BY THE APPROPRIATE AUTHORITIES PRIOR TO CONSTRUCTION. CALL BEFORE YOU DIG: 1-(800) 922-4455.
2. A PRECONSTRUCTION MEETING WITH TOWN STAFF AND ACOE IS REQUIRED PRIOR TO THE START OF ANY CONSTRUCTION ACTIVITY.
3. ALL MATERIALS AND METHODS OF CONSTRUCTION WITHIN THE CITY OF NEW LONDON RIGHT-OF-WAY SHALL CONFIRM TO THE CITY OF NEW LONDON PUBLIC WORKS DEPARTMENT STANDARD DETAILS. ALL MATERIALS AND METHODS OF CONSTRUCTION WITHIN THE STATE OF CONNECTICUT RIGHT-OF WAY SHALL CONFORM TO STATE OF CONNECTICUT DEPARTMENT OF TRANSPORTATION (CTDOT) STANDARD SPECIFICATIONS FOR ROADS, BRIDGES AND INCIDENTAL CONSTRUCTION, FORM 818.
4. THE SITE SHALL BE DEVELOPED IN SUCH A MANNER AS TO MINIMIZE EROSION, BOTH DURING CONSTRUCTION AND AFTER DEVELOPMENT AND TO PREVENT SEDIMENTATION OF WATERCOURSES AND STORM DRAINAGE SYSTEMS BOTH ON AND OFF THE SITE. DISTURBED AREAS SHALL BE KEPT TO A MINIMUM AND SEEDED AS SOON AS IS PRACTICAL. ALL DISTURBED AREAS WHICH WILL NOT RECEIVE FINAL GRADING AND SEEDING SHALL BE TEMPORARILY SEEDED DURING THE FALL TO PREVENT EROSIONS DURING THE WINTER AND EARLY SPRING. REASONABLE EROSION/SEDIMENTATION CONTROLS SHALL BE USED INCLUDING, BUT NOT LIMITED TO, STAKED HAY BALES, DRAINAGE DIVERSION, TEMPORARY SEEDING, SEDIMENTATION BASINS OR CHAMBERS, WATERING AND APPLICATION OF CHEMICAL AGENTS.
5. ALL DISTURBANCES TO EXISTING HURRICANE BARRIER SHALL BE RESTORED TO ORIGINAL CONDITION.
6. ALL MATERIALS USED FOR RESTORATION SHALL MEET SPECIFICATIONS OF EXISTING MATERIAL.
7. NO MATERIAL SHALL BE REMOVED FROM BARRIER THAT CHANGES ITS EXISTING ELEVATION.
8. ALL BASE MATERIAL TO BE TESTED PRIOR TO CONSTRUCTION.

20 0 20 40 60 80
SCALE: 1"= 20'

J:\214\09\Design\PLOT_New London.dgn

ANCHOR Barton & Loguidice
41 Sequin Drive
Glastonbury, CT 06033
Phone: (860) 633-8770
Fax: (860) 633-5971
www.anchorengr.com
Civil Engineering • Environmental Consulting • Land Surveying • Construction Management

PROJ. ENGINEER	MJP
PROJ. MANAGER	KRG
OFFICE REVIEW	MLK
REVISIONS	
SCALE:	AS NOTED

LAYOUT & GRADING
PLAN & PROFILE (BASE BID)
PREPARED FOR CITY OF NEW LONDON
NEW LONDON MULTI-USE TRAIL
BANK ST. TO SOUTH WATER ST. NEW LONDON, CT

PROJECT	DATE	SHEET NO.	OF
214-09	2/23/21	2	6

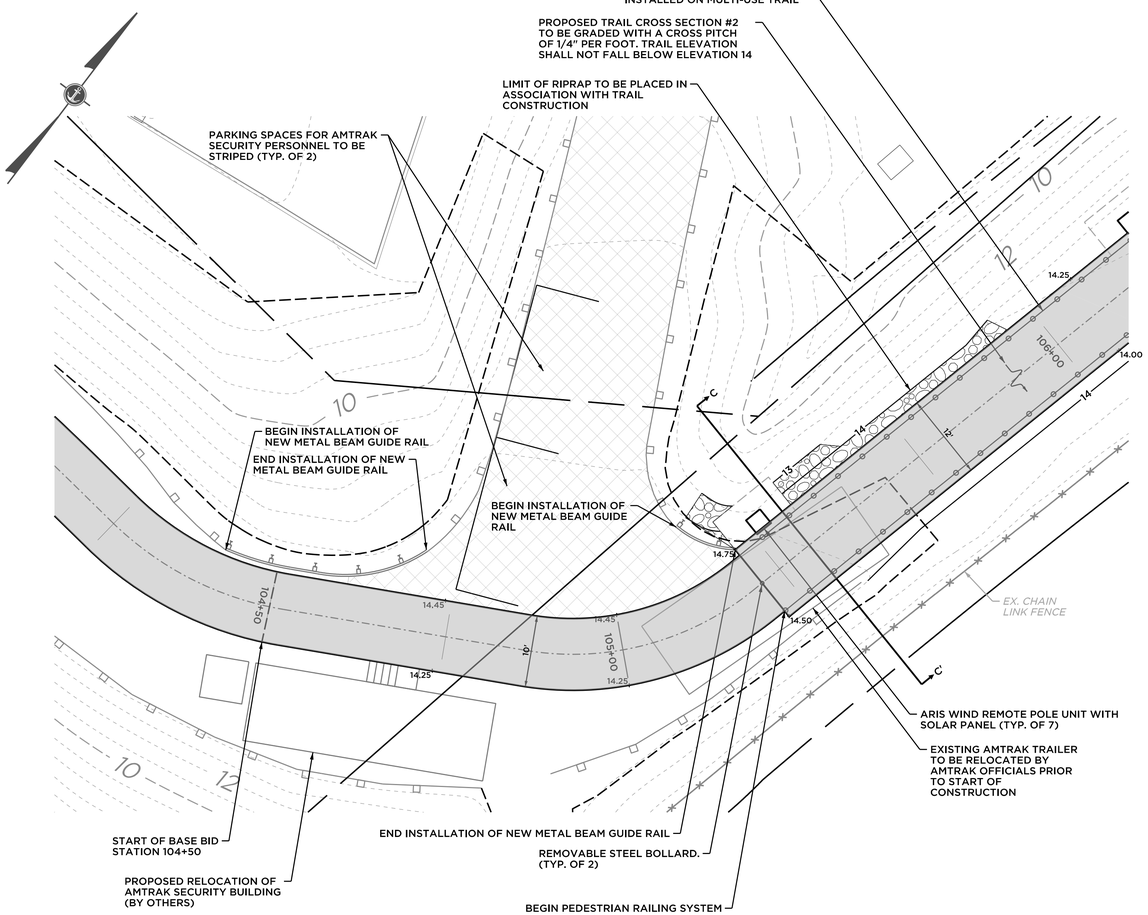

SITE PLAN ENLARGEMENT #1

SCALE 1" = 10'

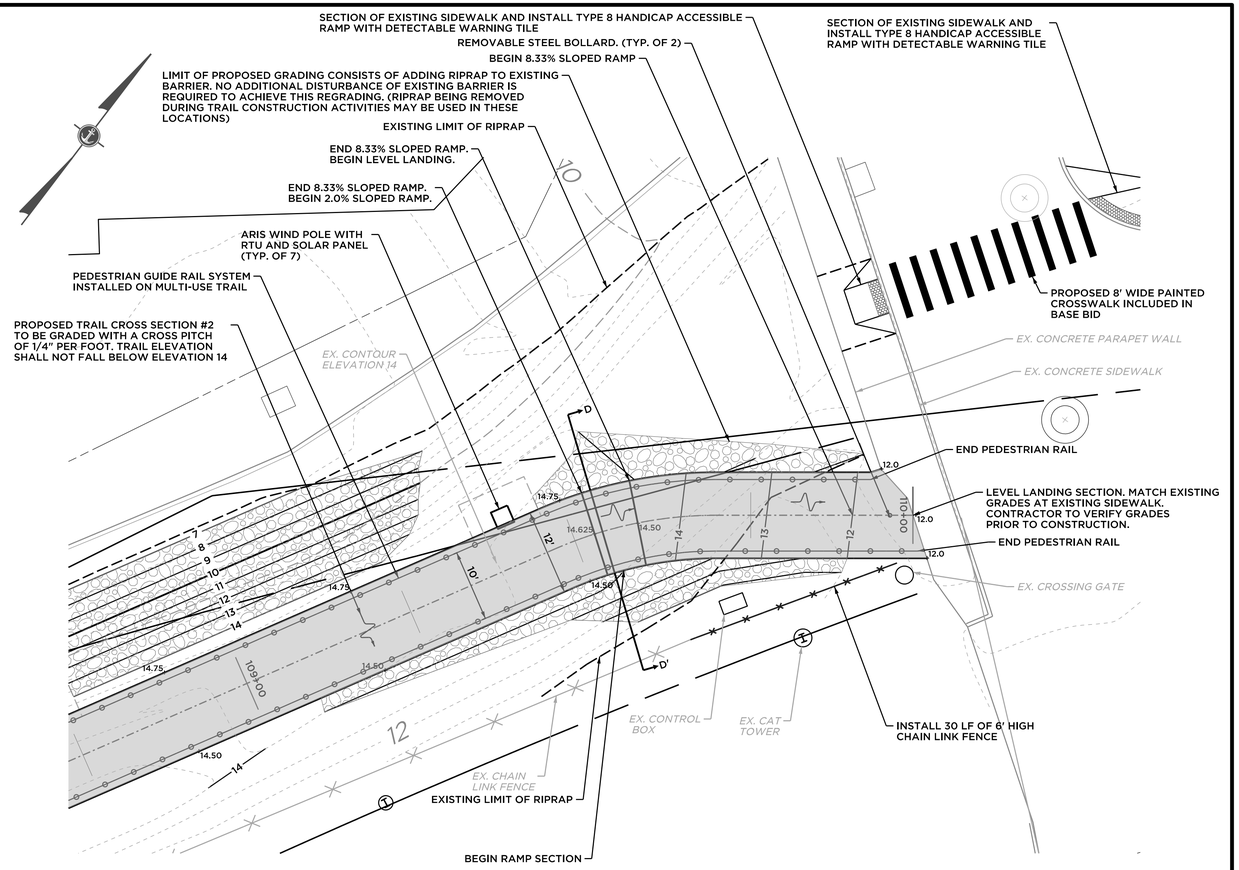

SITE PLAN ENLARGEMENT #2

SCALE 1" = 10'

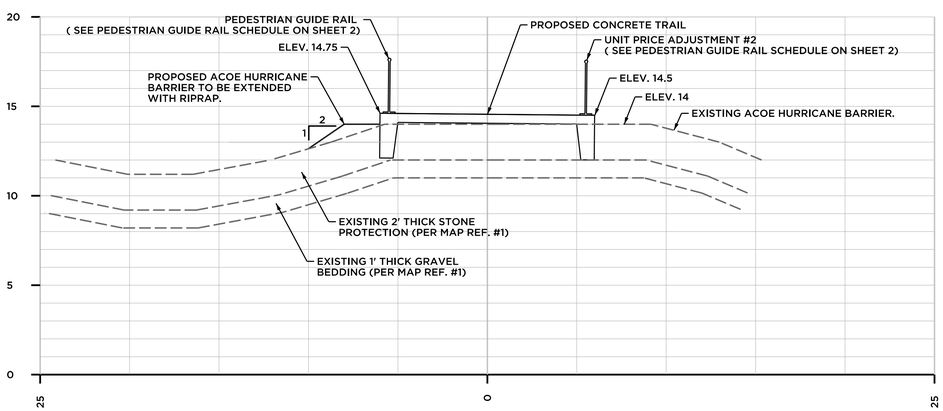

TRAIL CROSS SECTION (C-C')

SCALE 1"=4' VERT.
1"=4' HORZ.

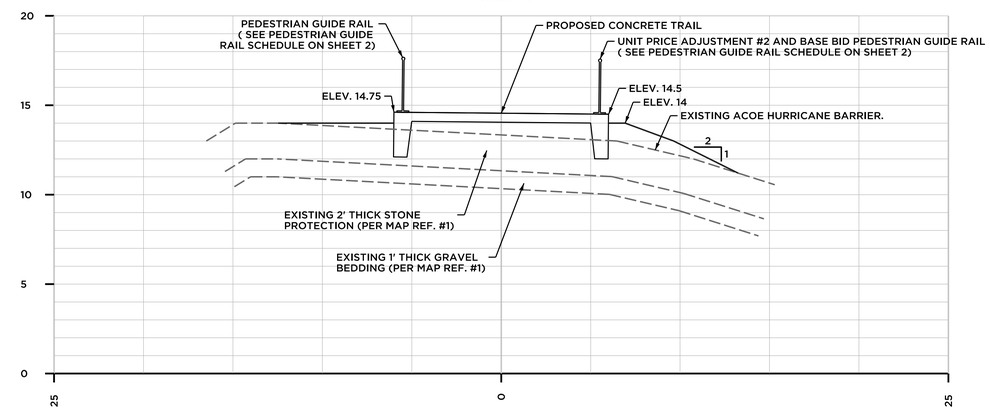

TRAIL CROSS SECTION (D-D')

SCALE 1"=4' VERT.
1"=4' HORZ.

MAP REFERENCES & SURVEY NOTES

1) *NEW LONDON HURRICANE PROTECTION, SHAW COVE, DIKE AND WALLS PART IV PLANS , PREPARED FOR THE CITY OF NEW LONDON BY DEPARTMENT OF THE ARMY NEW ENGLAND DIVISION CORPS OF ENGINEERS, WALTHAM, MASS., DATED FEBRUARY 1982, REVISED DECEMBER 11, 1986*

2) *EXISTING CONDITIONS PLAN HURRICANE BARRIER SHAW'S COVE/ THAMES RIVER PREPARED FOR GEI CONSULTANTS, INC. HOWARD STREET, BANK STREET, SPARYARD STREET AND SOUTH WATER STREET NEW LONDON, CONNECTICUT. SCALE: 1" = 20'. DATE: NOVEMBER 10, 2011. BY: DICESARE BENTLEY. SHEETS 4 THROUGH 7 OF 7.*

3) *ELEVATIONS DEPICTED HEREON ARE BASED UPON NORTH AMERICAN VERTICAL DATUM 1988 (NGVD88). TO CONVERT FROM NAVD 88 TO NGVD 29, ADD 0.968 FT IN ELEVATION TO ALL SURVEY DATA POINTS AND OR CONTOURS.*

4) *HORIZONTAL DATUM DEPICTED HEREON IS BASED UPON GPS THROUGH SUPERIOR INSTRUMENT RTK NETWORK AS WELL AS STATIC GPS OBSERVATIONS PROCESSED THROUGH THE NATIONAL OCEANIC AND ATMOSPHERIC ADMINISTRATION ONLINE POSITIONING USER SERVICE WEBSITE (NOAA OPUS).*

5) *EXISTING CONDITIONS PLAN HURRICANE BARRIER SHAW'S COVE/ THAMES RIVER PREPARED FOR GEI CONSULTANTS, INC. HOWARD STREET, BANK STREET, SPARYARD STREET AND SOUTH WATER STREET NEW LONDON, CONNECTICUT. SCALE: 1" = 20'. DATE: NOVEMBER 10, 2011. BY: DICESARE BENTLEY. SHEETS 4 THROUGH 7 OF 7.*

J:\214\09\Design\PLOT\New London.dgn

ANCHOR Barton & Loguidice
41 Sequin Drive
Glastonbury, CT 06033
Phone: (860) 633-8770
Fax: (860) 633-5971
www.anchorengr.com
Civil Engineering • Environmental Consulting • Land Surveying • Construction Management

PROJ. ENGINEER	MJP
PROJ. MANAGER	KRG
OFFICE REVIEW	MLK
REVISIONS	
SCALE:	AS NOTED

DETAILED PLAN ENLARGEMENTS

PREPARED FOR CITY OF NEW LONDON

NEW LONDON MULTI-USE TRAIL

BANK ST. TO SOUTH WATER ST. NEW LONDON, CT

PROJECT	DATE	SHEET NO.
214-09	2/23/21	3 OF 6

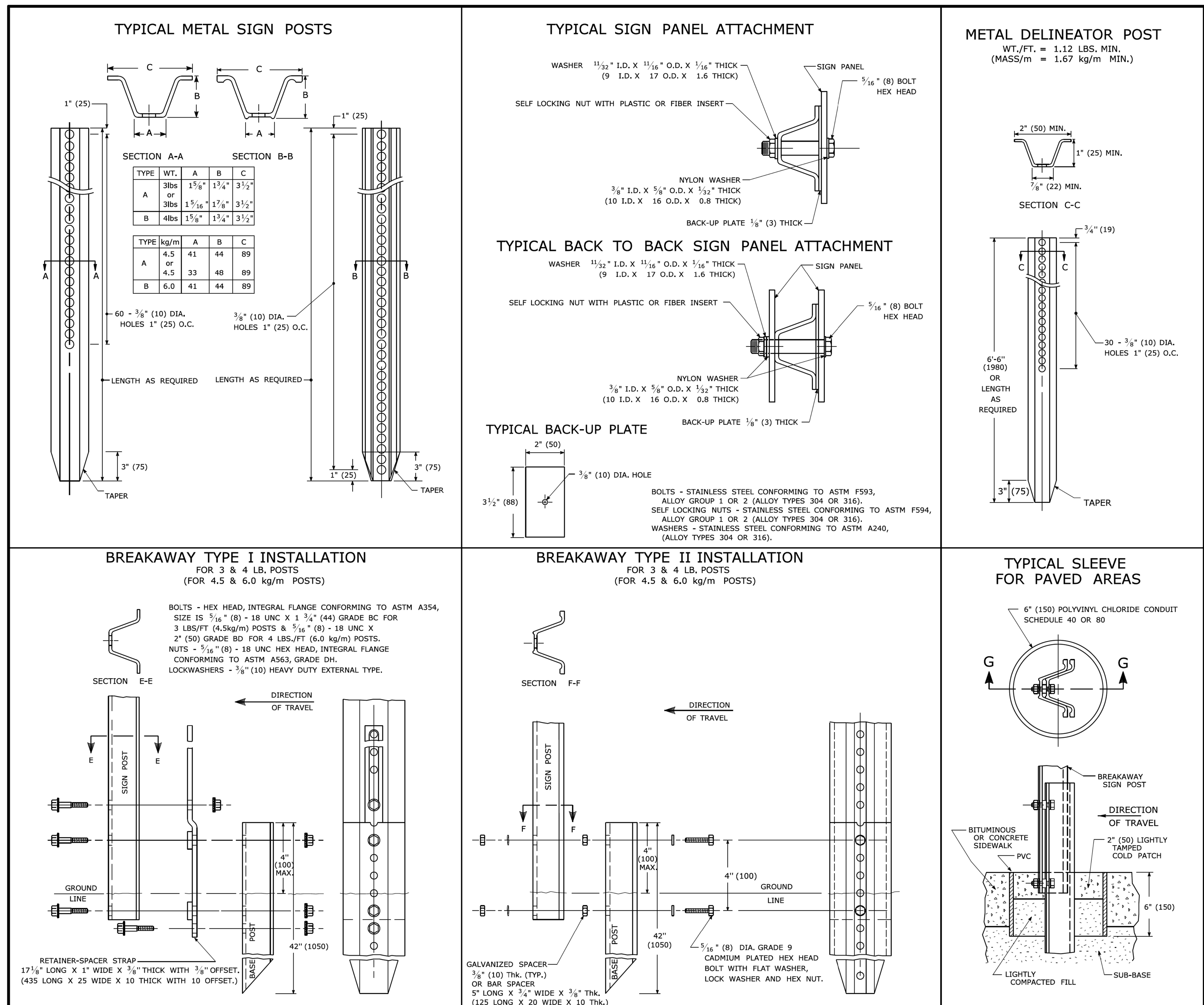

GENERAL NOTES:

1. STEEL FOR DELINEATOR POSTS SHALL BE ASTM A36/A36(m) STEEL. STEEL FOR ALL OTHER POSTS SHALL CONFORM TO THE MECHANICAL REQUIREMENTS OF ASTM A 499 GRADE 60 AND TO THE CHEMICAL REQUIREMENTS OF ASTM A1 CARBON STEEL TEE RAIL HAVING NOMINAL WEIGHT (MASS) OF 91lbs. (45 kg.) OR GREATER PER LINEAR YARD (METER).
2. AFTER FABRICATION, ALL STEEL POSTS, STRAPS AND PLATES SHALL BE GALVANIZED TO MEET THE REQUIREMENTS OF ASTM A123/A123(m).
3. WASHERS FOR BREAKAWAY INSTALLATIONS SHALL MEET ASTM F436, TYPE 1.
4. ALL BOLTS, NUTS, AND WASHERS FOR BREAKAWAY INSTALLATIONS SHALL BE GALVANIZED TO MEET THE REQUIREMENTS OF ASTM A153/A153(m).
5. ALL SIGN POSTS SHALL HAVE BREAKAWAY FEATURES THAT MEET AASHTO REQUIREMENTS CONTAINED IN THE CURRENT "STANDARD SPECIFICATIONS FOR STRUCTURAL SUPPORTS FOR HIGHWAY SIGNS, LUMINAIRES AND TRAFFIC SIGNALS." THE BREAKAWAY FEATURES SHALL BE STRUCTURALLY ADEQUATE TO CARRY THE SIGNS SHOWN IN THE PLANS AT 60 mph (97 km/h) WIND LOADINGS. INSTALLATIONS SHALL BE IN ACCORDANCE WITH MANUFACTURERS RECOMMENDATIONS.
6. TYPE A POSTS - 3 lbs/ft (4.5 kg/m) TYPE B POSTS - 4 lbs/ft (6 kg/m).

NOT TO SCALE | STATE OF CONNECTICUT DEPARTMENT OF TRANSPORTATION | CTDOT STANDARD SHEET | OFFICE OF ENGINEERING | METAL SIGN POSTS AND SIGN MOUNTING DETAILS | TR-1208_02

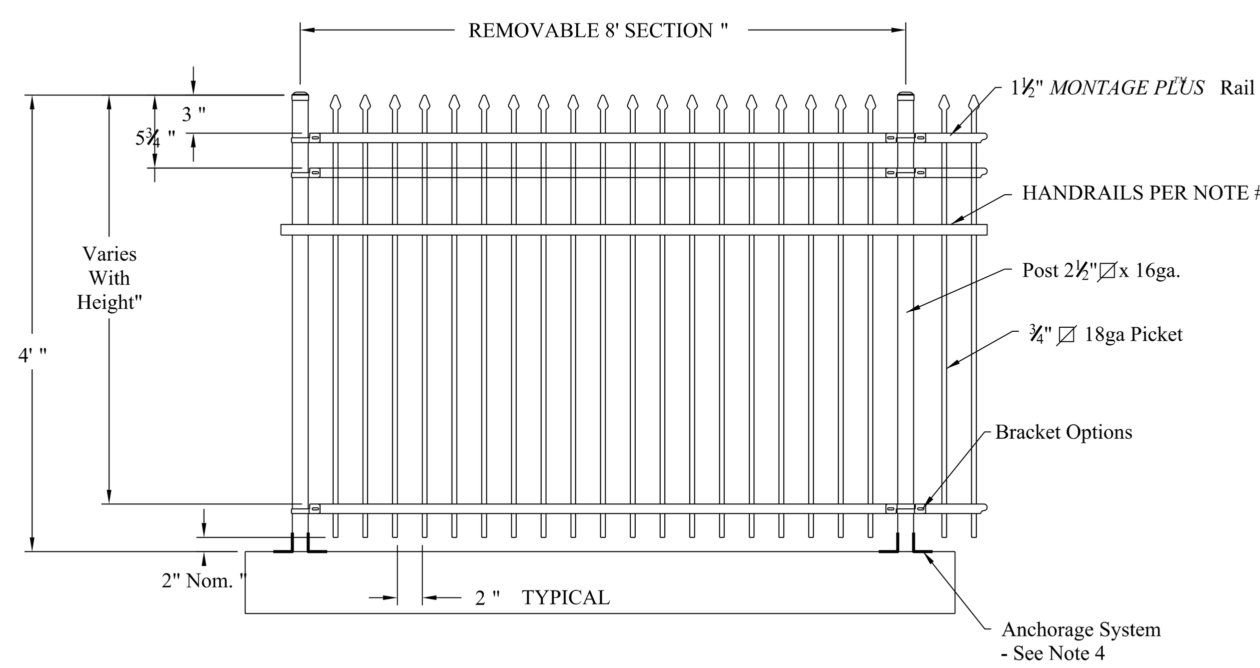

NOTE:

1. FENCE SHALL BE 4'-0" MIN. HIGH MONTAGE PLUS MAJESTIC 3-RAIL FENCE MANUFACTURED BY AMERISTAR (OR APPROVED EQUAL). MOUNTING BRACKETS SHALL BE ENGINEERED AND DESIGNED BY CONTRACTOR - SEE NOTE 4
2. CONTRACTOR SHALL PROVIDE ALTERNATE BID PRICING WHEN SPECIFYING APPROVED EQUAL STYLE/MANUFACTURER OPTION(S).
3. HANDRAILS INSTALLED BETWEEN 34"- 38" ABOVE FINISH GRADE WITH 12" HANDRAIL EXTENSIONS PURSUANT TO THE AMERICANS WITH DISABILITIES ACT ACCESSIBILITY GUIDELINES FOR BUILDINGS AND FACILITIES SHALL BE INSTALLED ON ALL RAMPS DEPICTED ON THE PLANS. THE HEIGHT, DIAMETER AND ATTACHMENT OF THESE HANDRAILS SHALL COMPLY WITH ALL APPLICABLE CODES AND BE CONSISTENT WITH THE MANUFACTURER'S RECOMMENDATIONS.
4. FENCE PANELS SHALL BE FACE MOUNTED/BOLTED TO CONCRETE MULTI-USE TRAIL SLAB SO AS TO BE EASILY REMOVABLE FOR EMERGENCY OPERATIONS AND MAINTENANCE ACTIVITIES (ALTERNATE CONNECTIONS MAY BE REVIEWED AND APPROVED BY CITY OF NEW LONDON AND ACOE)

PEDESTRIAN GUIDE RAIL DETAIL

NOT TO SCALE

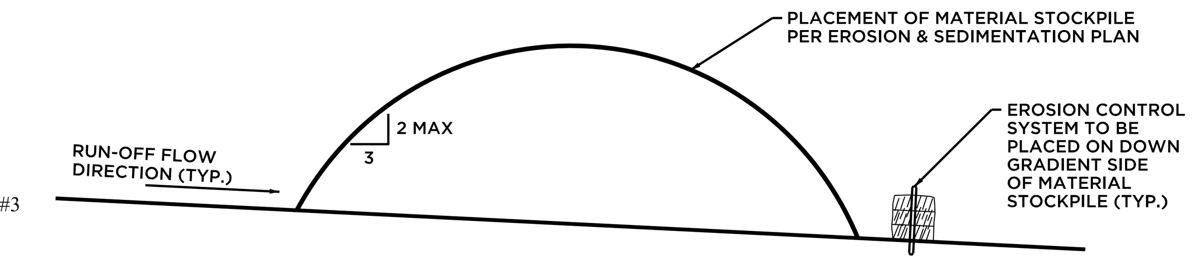

SOIL STOCKPILE DETAIL

NOT TO SCALE

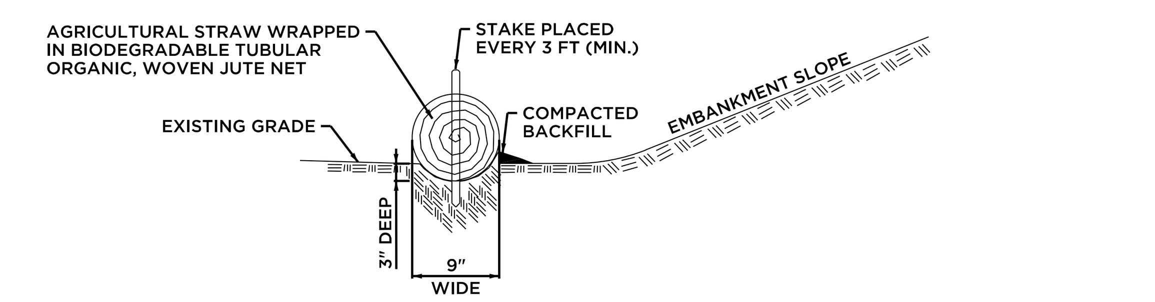

FILTRATION ROLL

NOT TO SCALE

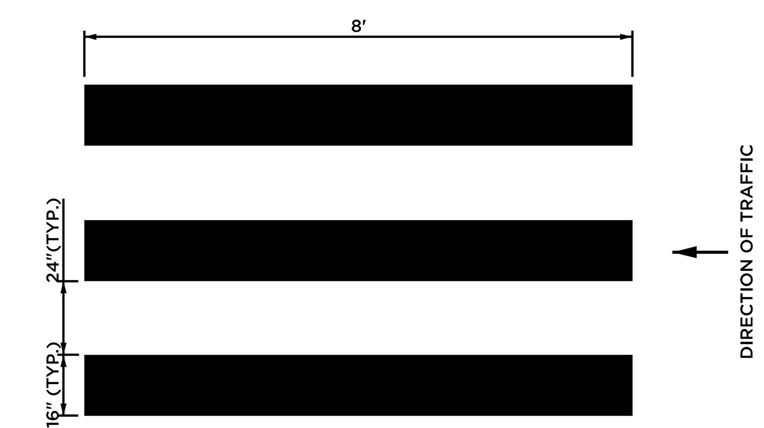

CROSSWALK DETAIL

NOT TO SCALE

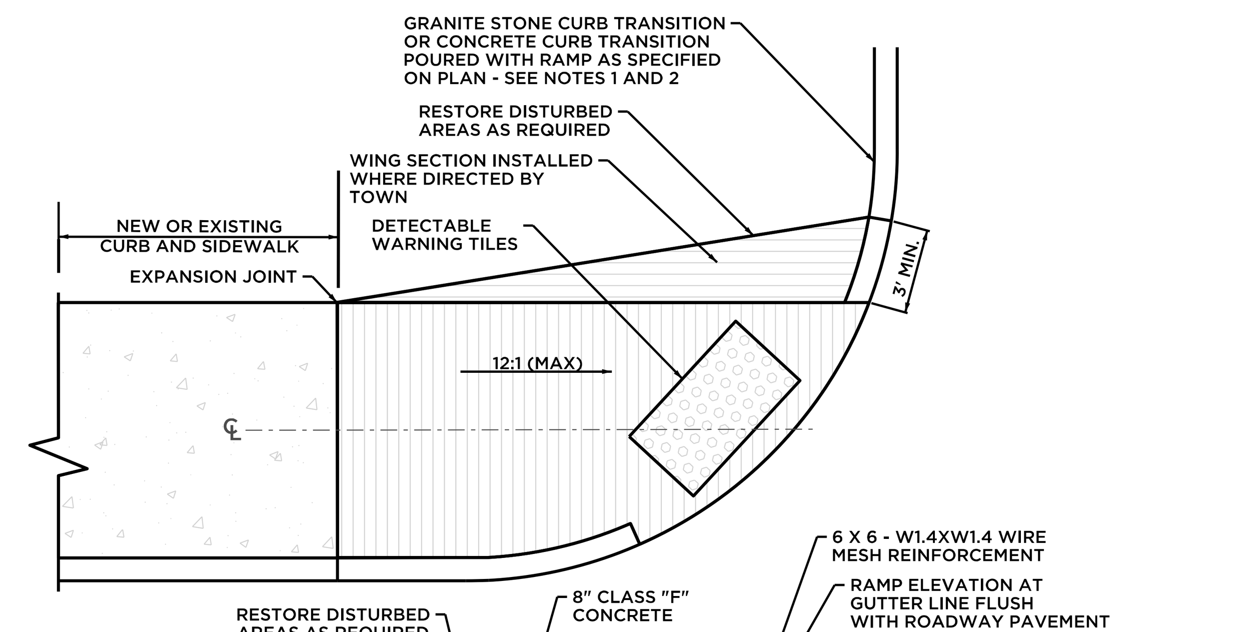

NOTES:

1. IN GENERAL, GRANITE CURB TRANSITIONS ARE TO BE INSTALLED WHEN RAMP IS ADJACENT TO GRANITE CURB AND CONC. CURB TRANSITIONS ARE TO BE INSTALLED WHEN RAMP IS ADJACENT TO BCLC OR CONCRETE CURB.
2. IF GRANITE CURB TRANSITIONS ARE INSTALLED, THE CONCRETE RAMP LANDING MAY BE POURED TO THE REQUIRED RADIUS AS DIRECTED BY THE TOWN.

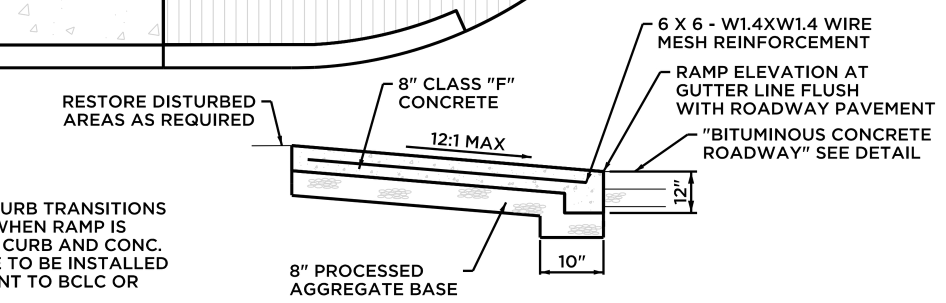

TYPICAL SECTION OF SIDEWALK CURB RAMP AT CENTERLINE

SIDEWALK RAMP - TYPE 4

NOT TO SCALE

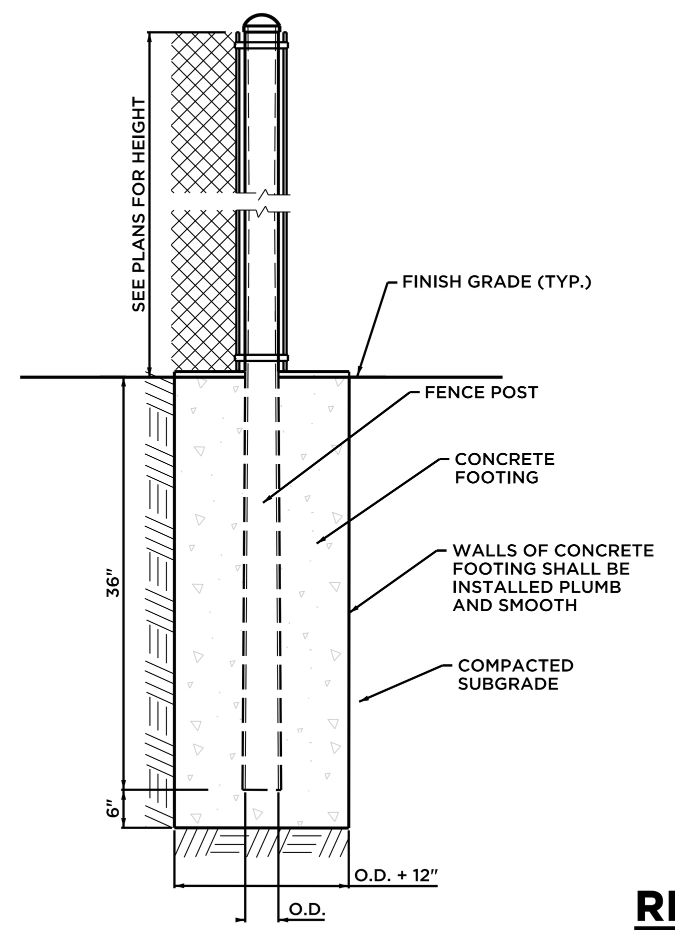

CHAINLINK FENCE & POST DETAIL

NOT TO SCALE

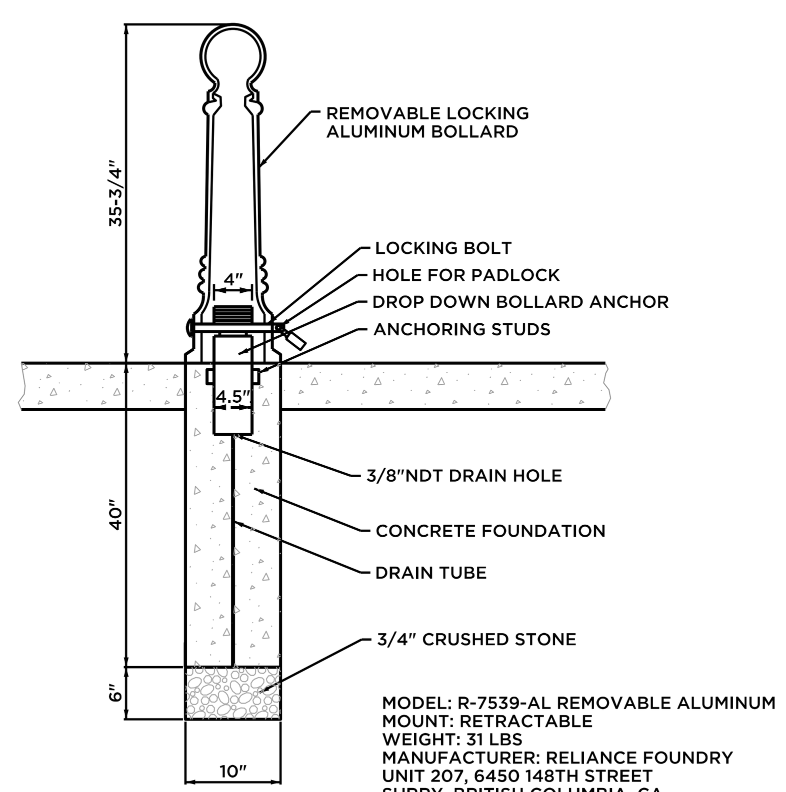

MODEL: R-7539-AL REMOVABLE ALUMINUM
MOUNT: RETRACTABLE
WEIGHT: 31 LBS
MANUFACTURER: RELIANCE FOUNDRY
UNIT 207, 6450 148TH STREET
SURRY, BRITISH COLUMBIA, CA
1-877-789-3245
INFO@RELIANCE-FOUNDRY.COM

REMOVABLE BOLLARD DETAIL

NOT TO SCALE

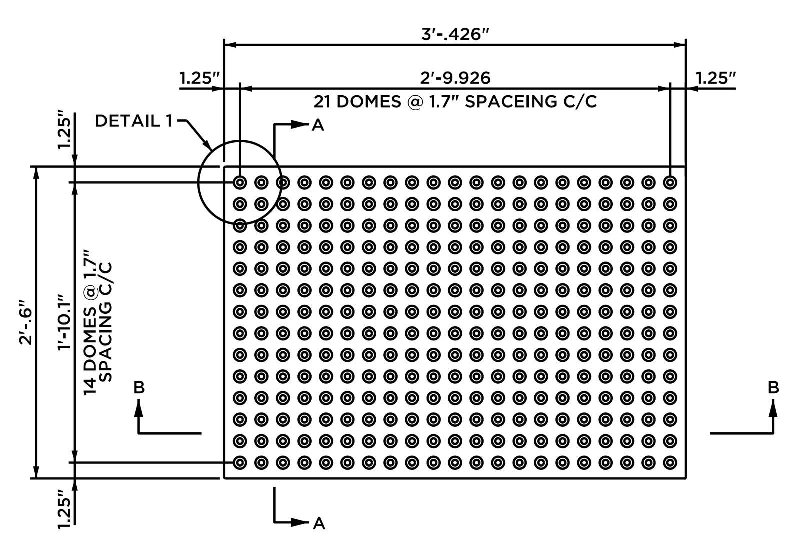

PLAN - TILE

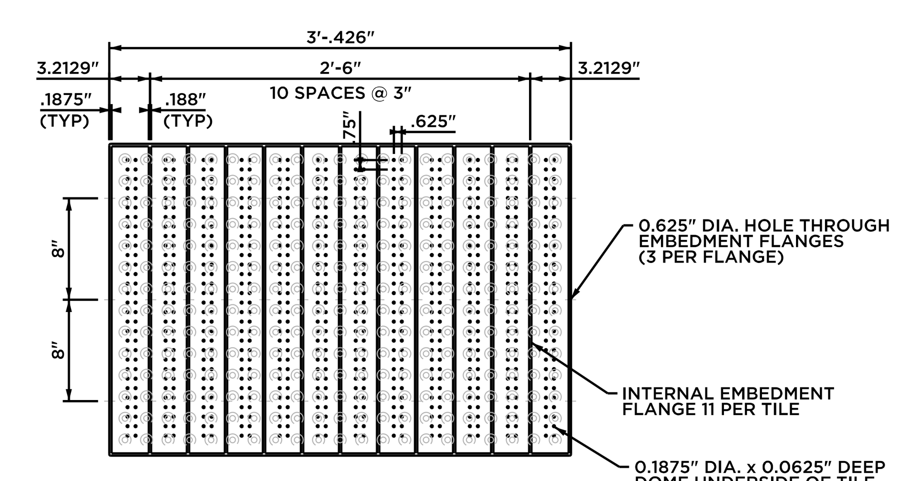

REFLECTED PLAN - TILE

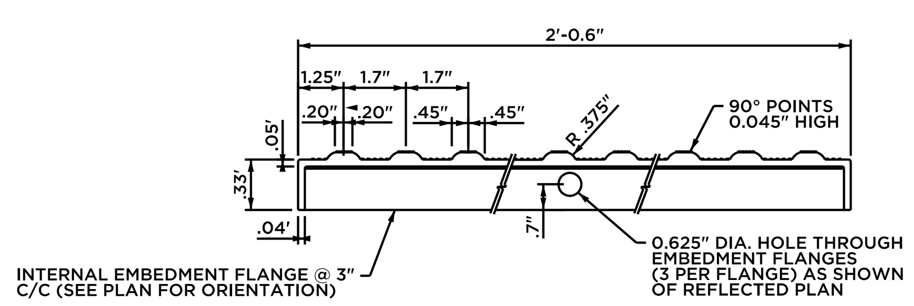

SECTION A-A

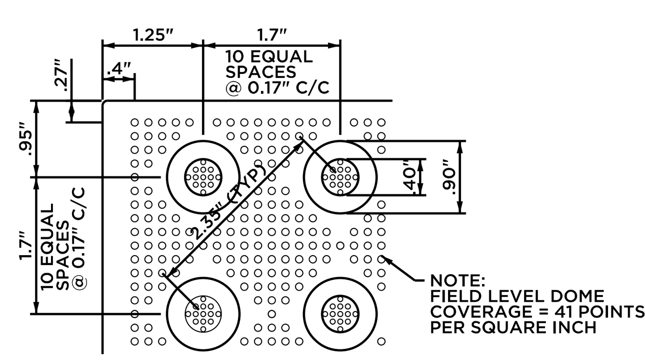

DETAIL 1

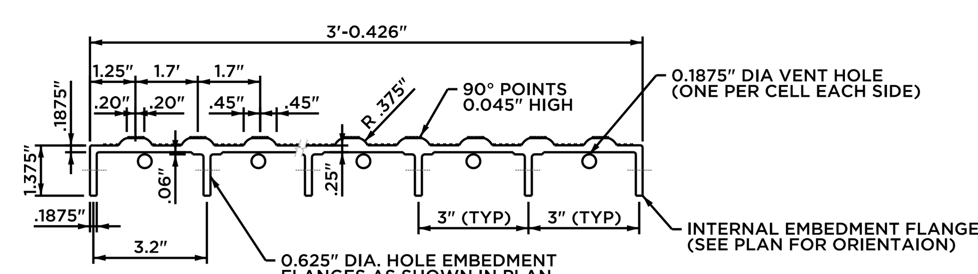

SECTION B-B

DETECTABLE WARNING SURFACE

NOT TO SCALE

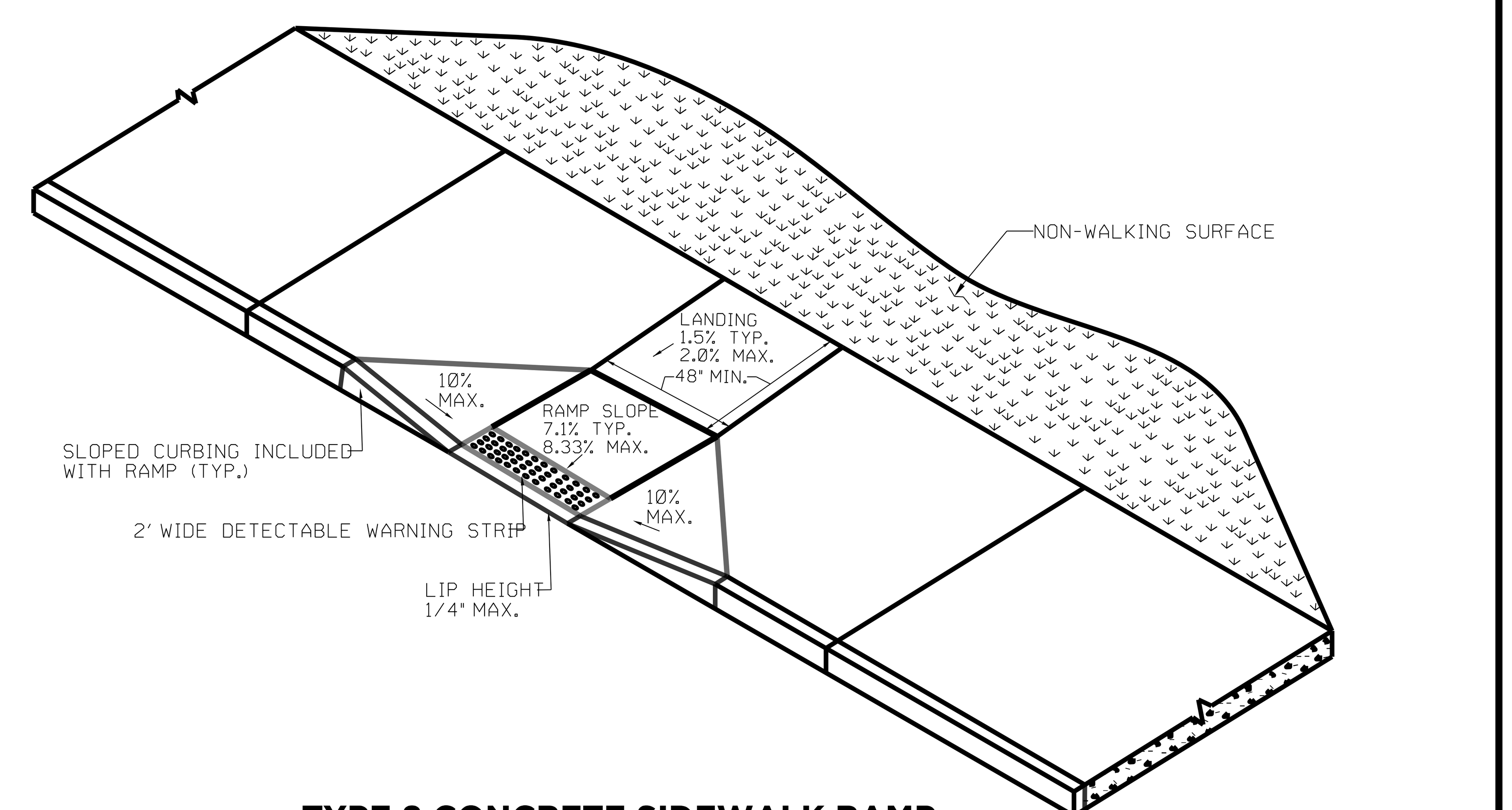

TYPE 8 CONCRETE SIDEWALK RAMP

NOT TO SCALE

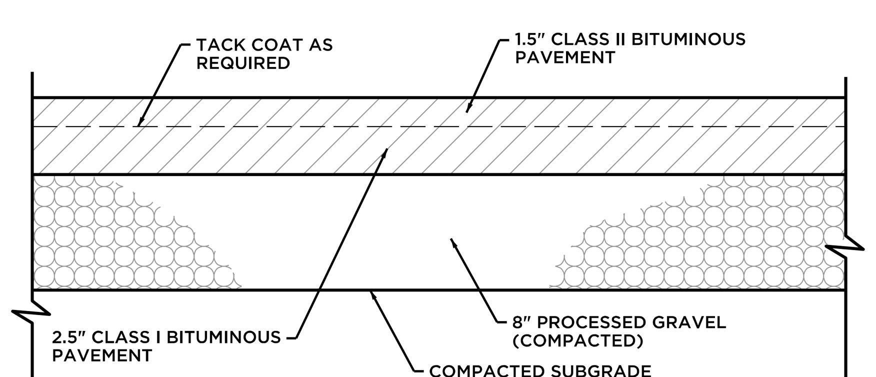

BITUMINOUS PAVEMENT

NOT TO SCALE

J:\214\09\Design\PLOT_New London.dgn

Barton & Loguidice / ANCHOR
41 Sequin Drive
Glastonbury, CT 06033
Phone: (860) 633-8770
Fax: (860) 633-5971
www.anchorengr.com
Civil Engineering • Environmental Consulting • Land Surveying • Construction Management

PROJ. ENGINEER	MJP
PROJ. MANAGER	KRG
OFFICE REVIEW	MLK
REVISIONS	
SCALE:	AS NOTED

SITE DEVELOPMENT DETAILS

PREPARED FOR
CITY OF NEW LONDON

NEW LONDON MULTI-USE TRAIL

BANK ST. AND SOUTH WATER ST. NEW LONDON, CT

PROJECT	DATE	SHEET NO.
214-09	2/23/21	4 OF 6

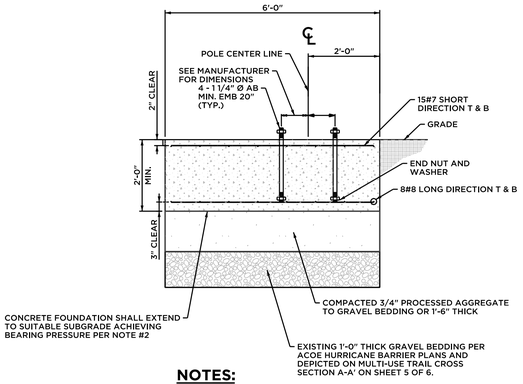

NOTES:

1) POLE MANUFACTURER ARIS-WIND OFF-GRID REMOTE POWER UNIT (RPU) 29'-7" POLE WITH 3,000 WATTS OUTPUT, SOLAR PANEL 64.6" x 36.3" AND 1 LED LIGHTING LAMP.
2) SOIL BEARING CAPACITY 3,000 PSF MIN.
3) CONCRETE 4,000 PSI REINFORCING 60 GRADE ASTM A615.
4) ANCHOR BOLTS GRADE 307 OR A36.
5) ASCE 7-10, VULT = 135 MPH, VAL = 105 MPH EXP C.
6) BASE PLATE AND BOLT CONFIGURATION BY MANUFACTURER.

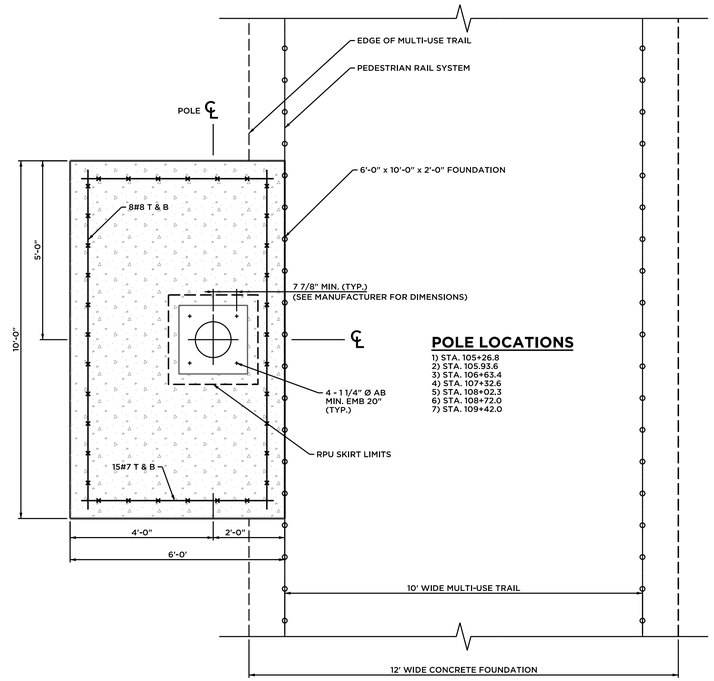

POLE LOCATIONS

1) STA. 105+26.8
2) STA. 105.93.6
3) STA. 106+63.4
4) STA. 107+32.6
5) STA. 108+02.3
6) STA. 108+72.0
7) STA. 109+42.0

FOUNDATION FOR 29'-7" ARIS REMOTE POWER UNIT WITH SOLAR PANEL ADD ALTERNATE #2

NOT TO SCALE

RPU Cut Sheet

Wind Power (Permanent Magnetic Generator)	
Rated Power Output	300W
Rated Wind Speed	9 m/s (20 mph)
Cut in Wind Speed	2 m/s (4.5 mph)
Solar Power	
Number of Panels	1 Polycrystalline Panel
Rated Power Output	250W - 400W
Panel Size	80 in (2032mm) x 40.3 in (1023.62mm)
LED Lighting	
Number of Lights	1-2 lamp arms/fixtures
Wattage/Fixture	40W - 100W Dimmable
Control System	
Charge Controller	Airsynergy Hybrid Controller
Voltage To Battery	24v
Batteries	
Type	Absorbent Glass Mat (AGM)
Number	(2) 12v Batteries for 24v Storage
Capacity (amp-hrs)	200Ah - 260Ah
Tower	
Material	Galvanized Steel
Powder Coat Paint	White

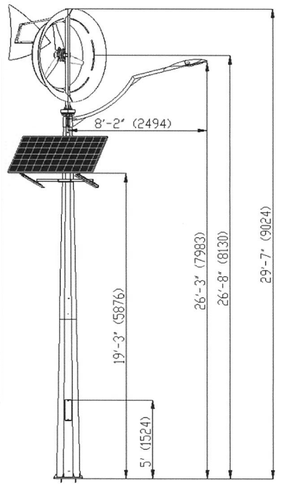

29'-7" ARIS REMOTE POWER UNIT WITH SOLAR PANEL ADD ALTERNATE #2

NOT TO SCALE

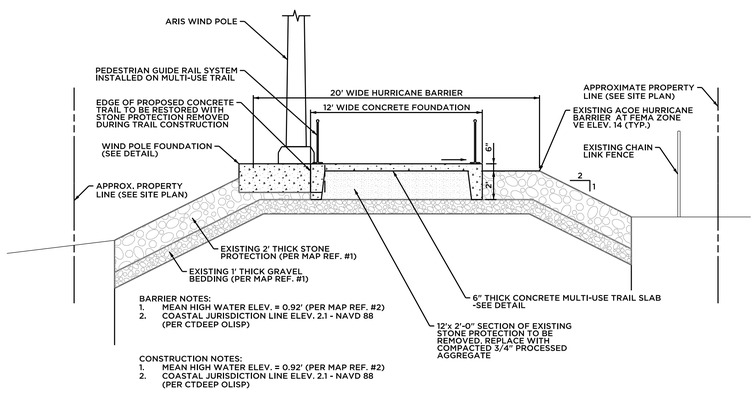

BARRIER NOTES:
1. MEAN HIGH WATER ELEV. = 0.92' (PER MAP REF. #2)
2. COASTAL JURISDICTION LINE ELEV. 2.1 - NAVD 88 (PER CTDEEP OLISP)

CONSTRUCTION NOTES:
1. MEAN HIGH WATER ELEV. = 0.92' (PER MAP REF. #2)
2. COASTAL JURISDICTION LINE ELEV. 2.1 - NAVD 88 (PER CTDEEP OLISP)

MULTI-USE TRAIL CROSS SECTION (A-A')

NOT TO SCALE

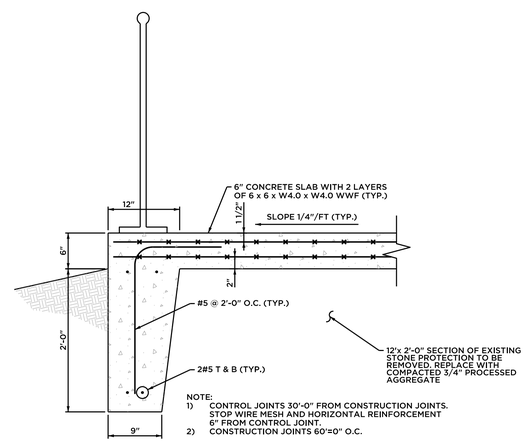

NOTE:
1) CONTROL JOINTS 30'-0" FROM CONSTRUCTION JOINTS. STOP WIRE MESH AND HORIZONTAL REINFORCEMENT 6" FROM CONTROL JOINT.
2) CONSTRUCTION JOINTS 60'=0" O.C.

MULTI-USE TRAIL SLAB DETAIL (STATION 105+22 - 110+00

NOT TO SCALE

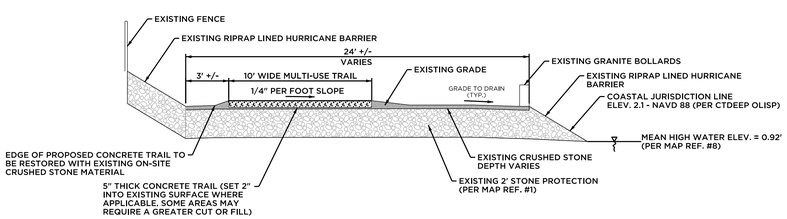

MULTI-USE TRAIL CROSS SECTION (B-B')

NOT TO SCALE

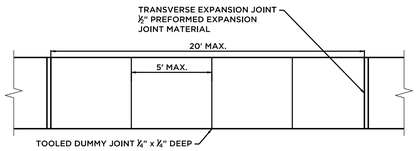

PLAN

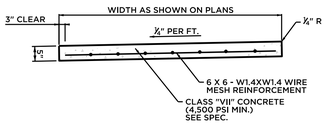

PROFILE

5" THICK CONCRETE MULTI-USE TRAIL (STATION 100+00 - 105+22)

NOT TO SCALE

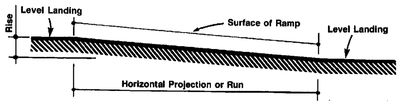

Slope	Maximum Rise in	Maximum Rise mm	Maximum Horizontal Projection ft	Maximum Horizontal Projection m
1:12 to < 1:16	30	760	30	9
1:16 to < 1:20	30	760	40	12

Fig. 16
Components of a Single Ramp Run and Sample Ramp Dimensions

4.8.3 Clear Width. The minimum clear width of a ramp shall be 36 in (915 mm).

4.8.4* Landings. Ramps shall have level landings at bottom and top of each ramp and each ramp run. Landings shall have the following features:

(1) The landing shall be at least as wide as the ramp run leading to it.

(2) The landing length shall be a minimum of 60 in (1525 mm) clear.

(3) If ramps change direction at landings, the minimum landing size shall be 60 in by 60 in (1525 mm by 1525 mm).

(4) If a doorway is located at a landing, then the area in front of the doorway shall comply with 4.13.6.

4.8.5* Handrails. If a ramp run has a rise greater than 6 in (150 mm) or a horizontal projection greater than 72 in (1830 mm), then it shall have handrails on both sides. Handrails are not required on curb ramps or adjacent to seating in assembly areas. Handrails shall comply with 4.26 and shall have the following features:

(1) Handrails shall be provided along both sides of ramp segments. The inside handrail on switchback or dogleg ramps shall always be continuous.

(2) If handrails are not continuous, they shall extend at least 12 in (305 mm) beyond the top and bottom of the ramp segment and shall be parallel with the floor or ground surface (see Fig. 17).

(3) The clear space between the handrail and the wall shall be 1 - 1/2 in (38 mm).

(4) Gripping surfaces shall be continuous.

(5) Top of handrail gripping surfaces shall be mounted between 34 in and 38 in (865 mm and 965 mm) above ramp surfaces.

(6) Ends of handrails shall be either rounded or returned smoothly to floor, wall, or post.

(7) Handrails shall not rotate within their fittings.

4.8.6 Cross Slope and Surfaces. The cross slope of ramp surfaces shall be no greater than 1:50. Ramp surfaces shall comply with 4.5.

4.8.7 Edge Protection. Ramps and landings with drop-offs shall have curbs, walls, railings, or projecting surfaces that prevent people from slipping off the ramp. Curbs shall be a minimum of 2 in (50 mm) high (see Fig. 17).

4.8.8 Outdoor Conditions. Outdoor ramps and their approaches shall be designed so that water will not accumulate on walking surfaces.

AMERICANS WITH DISABILITIES RAMP AND RAILING GUIDELINES

NOT TO SCALE

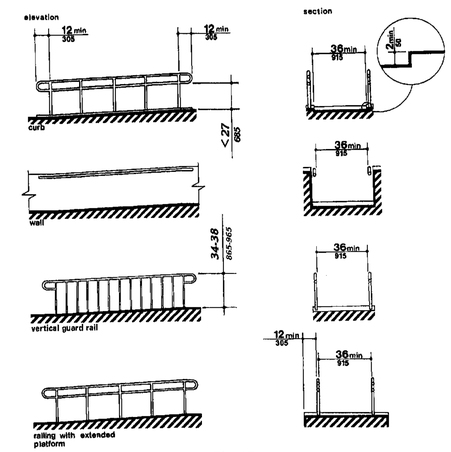

Fig. 17
Examples of Edge Protection and Handrail Extensions

J:\214\09\Design\PLOT_New London.dgn

ANCHOR Barton & Loguidice
41 Sequin Drive
Glastonbury, CT 06033
Phone: (860) 633-8770
Fax: (860) 633-5971
www.anchorengr.com
Civil Engineering • Environmental Consulting • Land Surveying • Construction Management

PROJ. ENGINEER	MJP
PROJ. MANAGER	KRG
OFFICE REVIEW	MLK
REVISIONS	

SITE DEVELOPMENT DETAILS
PREPARED FOR
CITY OF NEW LONDON
NEW LONDON MULTI-USE TRAIL
BANK ST. AND SOUTH WATER ST. NEW LONDON, CT

SCALE:	PROJECT	DATE	SHEET NO.	OF
AS NOTED	214-09	2/23/21	5	6

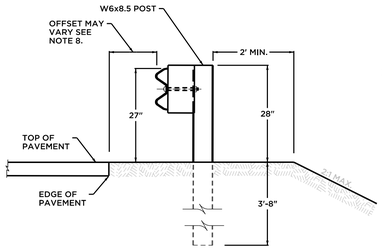

SECTION A-A

WITHOUT CURBING

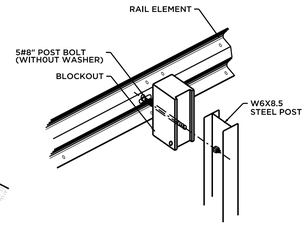

DETAIL A

RAIL MOUNTING

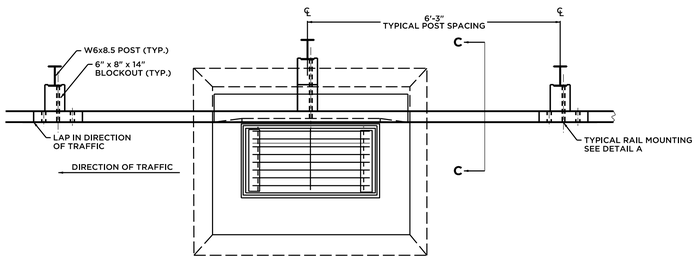

PLAN

METAL BEAM RAIL WITH MULTIPLE BLOCKOUTS TO AVOID UNDERGROUND OR LOW PROFILE OBSTRUCTION

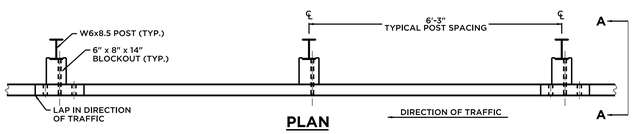

PLAN

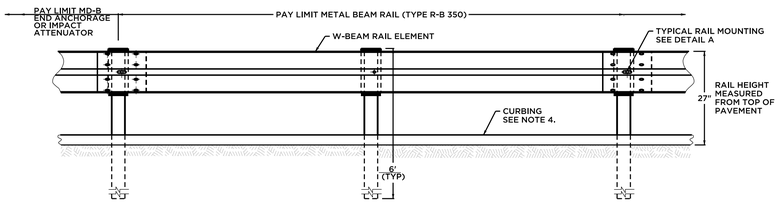

ELEVATION

GENERAL NOTES:

1. SEE MISCELLANEOUS CONNECTICUT DETAIL FOR METAL BEAM RAIL HARDWARE ELEMENTS.

2. MAXIMUM DESIGN DEFLECTION FOR R-B 350 AND MD-B 350 GUIDERAIL AT THE STANDARD POST SPACING OF 6'-3" IS 4'-3". DEFLECTION REQUIREMENT IS MEASURED FROM THE BACK OF POST TO THE FACE OF OBSTRUCTION.

3. FOR CURVES WITH RADII OF 150' OR LESS, ALL RAIL MEMBERS SHALL BE SHOP FABRICATED TO THE PROPER RADIUS AND GALVANIZED AFTER FABRICATION.

4. RAIL HEIGHT WITH CURBING SHALL BE MEASURED FROM THE TOP OF PAVEMENT. FACE OF RAIL ELEMENT SHALL BE PLACED FLUSH WITH THE FACE OF CURBING. ON HIGH SPEED ROADWAYS (≥ 50mph), 4" CURBING SHALL BE USED IN CONJUNCTION WITH GUIDERAIL. ON LOW SPEED ROADWAYS (< 50mph), 6" CURBING MAY BE USED IN CONJUNCTION WITH GUIDERAIL.

5. THREE BLOCKOUTS MAY BE USE WITH DESIGN APPROVAL FOR ONE POST ONLY. TWO BLOCKOUTS MAY BE USED FOR A SERIES OF POSTS.

6. COST OF ADDITIONAL BLOCKOUTS AND LONGER BOLT SHALL BE INCLUDED IN THE BID PRICE PER FOOT OF GUIDERAIL.

7. WEATHERING STEEL POST WHEN SPECIFIED SHALL BE GALVANIZED A MINIMUM OF 4' TO ALLOW FOR 1" EXPOSED GALVANIZED COATING ABOVE THE GROUND.

8. GUIDERAIL MAY BE PLACED 1 FOOT OR MORE FROM THE EDGE OF PAVEMENT ONLY ON SLOPES 10:1 OR FLATTER WITHOUT CURBING. IF THE RAIL IS INSTALLED WITHIN 2' OF THE EDGE OF PAVEMENT, THE RAIL HEIGHT IS MEASURED FROM THE SHOULDER SLOPE EXTENDED TO THE RAIL. IF THE RAIL IS INSTALLED BEYOND 2' FROM THE EDGE OF PAVEMENT, THE RAIL HEIGHT IS MEASURED FROM THE GROUND DIRECTLY BELOW THE RAIL.

METAL BEAM RAIL DETAIL (TYPE R-B 350)

NOT TO SCALE

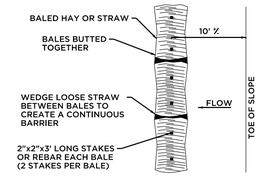

PLAN

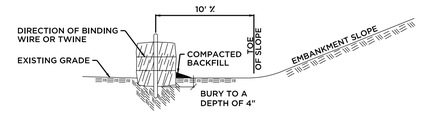

SECTION AT TOE OF SLOPE

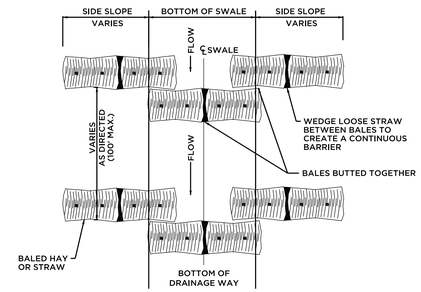

PLAN

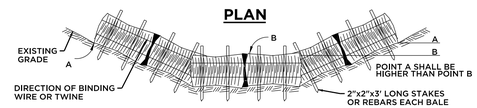

SECTION AT SWALE

HAY BALES

NOT TO SCALE

EROSION & SEDIMENTATION CONTROL PLAN:

1. ALL EROSION AND CONTROL MEASURES WILL BE INSTALLED AT THE PROJECT SITE PRIOR TO CONSTRUCTION WHEREEVER POSSIBLE.
2. AN ANTI-TRACKING APRON WILL BE INSTALLED AT THE ENTRANCE TO THE CONSTRUCTION SITE IN ORDER TO PREVENT THE TRANSPORT OF SEDIMENTS OFF THE CONSTRUCTION SITE BY TRUCK AND CONSTRUCTION EQUIPMENT TRAFFIC.
3. AN EROSION CONTROL SYSTEM SHALL BE INSTALLED AROUND ALL ON-SITE STOCKPILES OF SOIL.
4. DUST CONTROL MEASURES SHALL BE APPLIED THROUGHOUT THE CONSTRUCTION PERIOD AND UNTIL ALL DISTURBED AREAS HAVE BEEN STABILIZED.
5. DUST CONTROL MEASURES WILL BE APPLIED DURING THE CONSTRUCTION PERIOD UNTIL ALL DISTURBED AREAS HAVE BEEN STABILIZED, AS REQUIRED BY FIELD CONDITIONS.
6. TEMPORARY SEDIMENT TRAPS WILL BE INSTALLED AS NECESSARY DURING CONSTRUCTION ACTIVITIES. ALL TEMPORARY STORMWATER DISCHARGE WILL BE DIRECTED TO THESE TRAPS.

EROSION & SEDIMENTATION CONTROL NOTES:

1. EROSION AND SEDIMENTATION CONTROL MEASURES SHALL BE INSTALLED AS SHOWN ON THE PLANS, OR AS DIRECTED BY THE TOWN PRIOR TO CONSTRUCTION.
2. ALL EROSION AND SEDIMENTATION CONTROL MEASURES SHALL BE CONSTRUCTED IN ACCORDANCE WITH THE STANDARDS AND SPECIFICATIONS OF THE "CONNECTICUT GUIDELINES FOR SOIL EROSION AND SEDIMENT CONTROL", DATED 2002, AS AMENDED AND THE TOWN REGULATIONS.
3. ALL EROSION CONTROL DEVICES SHALL BE MAINTAINED OR REPLACED BY THE CONTRACTOR DURING THE CONSTRUCTION PERIOD AS NECESSARY OR AS REQUIRED BY THE ENGINEER OR TOWN.
4. ALL ON-SITE EROSION AND SEDIMENT CONTROLS ARE REQUIRED TO BE INSPECTED WITHIN 24-HOURS AFTER A RAIN EVENT OF AT LEAST A HALF-INCH, AND MAINTAINED, REPLACED OR INCREASED AS REQUIRED BY SPECIFIC FIELD CONDITIONS.
5. SEDIMENT REMOVED FROM ANY CONTROL STRUCTURES SHALL BE DISPOSED OF IN A MANNER WHICH IS CONSISTENT WITH THE INTENT OF THE PLAN.
6. ADDITIONAL EROSION CONTROL MEASURES WILL BE INSTALLED DURING THE CONSTRUCTION PERIOD IF DEEMED NECESSARY OR REQUIRED BY THE ENGINEER OR TOWN.
7. THE CONTRACTOR WILL BE RESPONSIBLE FOR IMPLEMENTING ALL EROSION AND SEDIMENTATION CONTROL DEVICES AS SHOWN ON THESE PLANS OR AS ORDERED BY THE ENGINEER.
8. ALL DISTURBED AREAS ARE TO BE RAKED, SEEDED AND FERTILIZED PER "TURF ESTABLISHMENT" SPECIFICATION IN CTDOT 817A, AT THE COMPLETION OF PROJECT.

J:\214\09\Dwdgs\PLOT_New London.dgn

ANCHOR Barton & Loguidice
41 Sequin Drive
Glastonbury, CT 06033
Phone: (860) 633-8770
Fax: (860) 633-5971
www.anchorengr.com
Civil Engineering • Environmental Consulting • Land Surveying • Construction Management

PROJ. ENGINEER	MJP
PROJ. MANAGER	KRG
OFFICE REVIEW	MLK
REVISIONS	

SITE DEVELOPMENT DETAILS
PREPARED FOR
CITY OF NEW LONDON
NEW LONDON MULTI-USE TRAIL
BANK ST. AND SOUTH WATER ST. NEW LONDON, CT

SCALE:	PROJECT	DATE	SHEET NO.
AS NOTED	214-09	2/23/21	6 OF 6

TAB K

Appendix

DEPARTMENT OF THE ARMY
US ARMY CORPS OF ENGINEERS
NEW ENGLAND DISTRICT
696 VIRGINIA ROAD
CONCORD MA 01742-2751

November 15, 2019

Engineering Division

Mr. Brian Sear
Interim Director of Public Works, City of New London
181 State Street
New London, CT 06320

Dear Mr. Sear:

This letter is in regards to the requested Section 408 review for the proposed Waterfront Park Multi-Use Trail project to be located along the U.S. Army Corps of Engineers (USACE) federally constructed Shaw's Cove Flood Damage Reduction (FDR) System in New London, CT. The Waterfront Park Multi-Use Trail will connect to the existing River Walk Extension trail and is intended to allow residents to engage in recreation activities, provide for alternate modes of transportation, improve tourism and economic development, and improve access to the system for operations and maintenance activities.

The Shaw's Cove – New London, CT FDR System consists of approximately 3,900 feet of armored dikes and concrete floodwalls protecting Shaw's Cove. The armored dikes consist of an impervious core with an outer facing of stone protection. The system also includes a pump station to remove runoff during high tide events.

The proposed project involves construction of approximately 2,340 feet of 10-foot-wide multi-use trail that runs east along the existing access road from the DDLC energy facility to Sparyard Street, then turns north and runs along the crest of the dike to the Bank Street Connector and consists of two sections: Section-I (Station 100+00 to Sparyard Street) and Section-II (Sparyard Street to the Bank Street Connector). Section-I will be constructed on a portion of the armored dike that is currently covered with an approximately 24-foot-wide crushed stone surfacing that acts as an access road. Section-I will consist of a 10-foot-wide, 5-inch-thick concrete slab embedded approximately 2 inches into the dike (through 1 inch of crushed stone surfacing and 1 inch of random fill). Section-II will be constructed on a portion of the dike crest that is currently covered with 24 inches of armor stone. A 12-foot-wide section of the armor stone will be removed and replaced with two precast concrete grade beams along either side of the armor stone excavation and a 19-inch-thick layer of compacted, processed aggregate between the grade beams. The grade beams and processed aggregate will then both be covered by a 12-foot-wide, 5-inch thick cast-in-place concrete slab. Along both sections, the concrete slab will support a pedestrian guide rail system.

The USACE New England District reviewed the information supplied in the following documents:

a. Letter titled "Waterfront Park Multi-Use Trail at Shaw's Cove, New London, CT" prepared by Anchor Engineering Services Incorporated, dated April 19, 2018.

b. Submittal titled "USACE Section 408 Permit Application for the Waterfront Park Multi-Use Trail at Shaw's Cove" prepared by Anchor Engineering Services Incorporated, dated April 19, 2018.

c. Submittal titled "Site Plans for the New London Multi-Use Trail New London, CT" prepared by Anchor Engineering Services Incorporated, dated March 19, 2018.

Based on the information supplied above, it is the opinion of USACE that the proposed Waterfront Park Multi-Use Trail project, as presented in the documents above, does not require a Section 408 approval. The proposed project does not alter the function of the existing FDR System identified above and should not adversely affect the operation of the FDR System, provided that no damage, collapse, or impacts to the structural integrity of the FDR System and the associated appurtenances occurs during the construction activities of the project. Any damages to the system incurred during construction shall be immediately repaired to the satisfaction of USACE so as to not affect the safety of the public due to flooding.

This acceptance of the above referenced project is contingent upon adhering to the following comments:

- The City shall perform pre- and post-construction surveys of the levee and provide the results to USACE to demonstrate that the design elevation has been maintained.

- Provide a detail of the guide rail system showing the connection method to the concrete slab. From the information provided, it not clear how the guide rail system will be connected to the concrete slab, and whether it is readily removable for emergency operations and maintenance actions.

- Provide a detail with sections for the transitions of the path at the start and end of Section B-B' (approximately STA 105+00 to STA 106+00 and 109+00 to 110+00) showing the details of the additional material that will need to be added to support the concrete slab.

- No landscape plantings of any type shall be allowed within 15-feet of the levee or channel embankments. Above ground planters are acceptable, provided they do not hinder operations and maintenance of the systems. All existing vegetation, excluding grass, on or within 15-feet of the toe of the levee embankments and within the City's maintenance easement limits shall be removed, per the

requirements of Engineering Pamphlet (EP) 1110-2-18. Areas where vegetation has been removed shall be reseeded with an appropriate grass mixture.

- Prior to the start of construction, an Emergency Action Plan (EAP) shall be developed and submitted to USACE for approval. All construction work will be subject to conditions of the EAP, such that the City is monitoring river levels and prepared to take precautionary or emergency measures to prevent damage due to flooding during construction and avoid construction equipment being in the floodway during a high water event. It is recommended that the City coordinate the development of the EAP with USACE prior to submittal. USACE will provide examples of acceptable EAP formats upon request.

- Within 90 days of the completion of the project, the city of New London shall provide USACE with one electronic copy (PDF format) of all reports and any other pertinent information (construction quality assurance reports, QA/QC checklists, daily construction records, submittals, and as-built drawings) requested by the USACE showing the work has been completed. The documents shall be signed and sealed by a professional engineer/land surveyor, as applicable.

- Access to the FDR Systems shall be maintained at all times for the duration of the project. Any damages to the systems or their components, including but not limited to the levee embankments, channel, or other appurtenant system components shall be immediately repaired to the satisfaction of USACE so as to not affect the safety of the public due to flooding.

- All vertical data shall be in North American Vertical Datum of 1988 (NAVD88), which is the current orthometric vertical reference datum within the National Spatial Reference System. We also request that the vertical datum be referenced to the older, superseded, NGVD29 to establish the relationship with the original design reference datum.

- Any changes or amendments to the above referenced documents or drawings shall be submitted to USACE for acceptance *prior* to implementation. Note that potential changes may result in the project requiring a Section 408 approval. Additionally, USACE reserves the right to require any and all project submittals for review and acceptance.

- The issuance of this action does not relieve the city of New London from its obligation to obtain any other federal, state, or local approvals or permits as may be required for this project, including but not limited to, Section 10 and Section 404 permits

USACE reserves the right and authority to request removal of any components of the system, if such components do not conform to regulations, policies, or guidance or if such components present an adverse impact to the FDR System. If a potential situation

arises between the Waterfront Park Multi-Use Trail project and the FDR System, USACE will work with the city of New London to develop potential solutions to address the concern. The Waterfront Park Multi-Use Trail project and appurtenances for the FDR System are classified as betterments and are not eligible for Public Law 84-99 rehabilitation assistance within the USACE Rehabilitation Program (RIP). Any damages to these areas during a flood event shall be repaired immediately.

Be assured that USACE holds life and public safety paramount with regards to protecting the communities behind the Shaw's Cove – New London, CT FDR Systems. Should you have any further questions or concerns, please feel free to contact Alex Garneau at (978) 318-8389.

Sincerely,

DIROCCO.KEVIN.J.1500562834

Digitally signed by DIROCCO.KEVIN.J.1500562834
Date: 2019.11.19 13:20:54 -05'00'

Kevin DiRocco, P.E.
Levee Safety Program Manager

Copy Furnished:

Kevin R. Grindle, ASLA, PLA
Senior Landscape Architect / Associate
Anchor Engineering Services, Inc.
41 Sequin Drive
Glastonbury, CT 06033