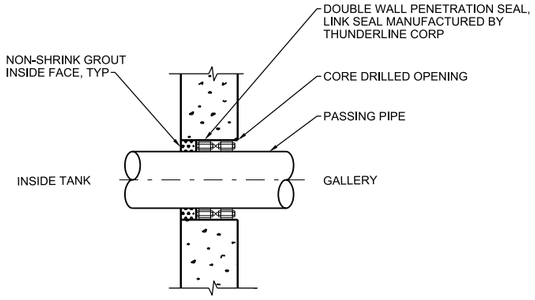

WALL PENETRATION

NTS

2205-110

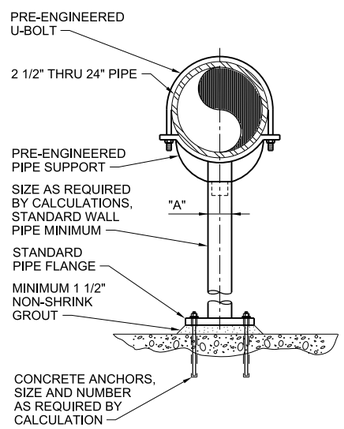

DIMENSION TABLE	
PIPE SIZE	"A" MINIMUM NOMINAL PIPE SIZE
2-1/2"	2-1/2"
3"	2-1/2"
4"	3"
6"	3"
8"	3"
10"	3"
12"	3"
14"	3"
16"	3"
20"	4"
24"	4"

NOTE:
SUBMIT FINAL DESIGN AND CALCULATIONS FOR SUPPORT AND ANCHORAGE AS SPECIFIED.

PIPE SUPPORT SADDLE
SADDLE SUPPORT PEDESTAL TYPE - NON-ADJUSTABLE

NTS

4005-501

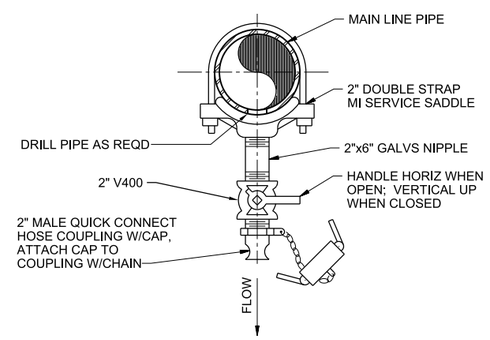

NOTES:

1. FOR LINE SIZE 2" AND SMALLER, FITTINGS AND VALVES SHALL BE SAME SIZE AS LINE.
2. PROVIDE FLUSHING CONNECTION FOR ALL OTHER LOCATIONS WITH (F) .

FLUSHING CONNECTION

NTS

4027-191

STATE OF CONNECTICUT
STEPHEN A. CLARK
No. 29849
LICENSED PROFESSIONAL ENGINEER

NO.	DATE	REVISION	BY	APVD

DSGN S CLARK | DR N PATTERSON | CHK S CLARK | APVD S CLARK

©CH2M HILL 2015 ALL RIGHTS RESERVED.

SLUDGE STORAGE TANKS REHABILITATION
NEW LONDON, CONNECTICUT
WASTE WATER TREATMENT PLANT
NEW LONDON, CONNECTICUT

REUSE OF DOCUMENTS: THIS DOCUMENT, AND THE IDEAS AND DESIGNS INCORPORATED HEREIN, AS AN INSTRUMENT OF PROFESSIONAL SERVICE IS THE PROPERTY OF CH2M HILL AND IS NOT TO BE USED, IN WHOLE OR IN PART, FOR ANY OTHER PROJECT WITHOUT THE WRITTEN AUTHORIZATION OF CH2M HILL.

ch2m

PROCESS MECHANICAL
DETAILS

VERIFY SCALE
BAR IS ONE INCH ON ORIGINAL DRAWING.
0 1"

DATE	NOVEMBER 2016
PROJ	668991
DWG	DL-004
SHEET	of

BID DOCUMENTS

FILENAME: 209-DL-004_668991.dgn PLOT DATE: 11/27/2016 PLOT TIME: 7:03:15 PM